TM 9-2330-205-14&P

TECHNICAL MANUAL

OPERATOR'S, ORGANIZATIONAL, DIRECT SUPPORT, AND GENERAL SUPPORT MAINTENANCE (INCLUDING REPAIR PARTS AND SPECIAL TOOLS LIST)

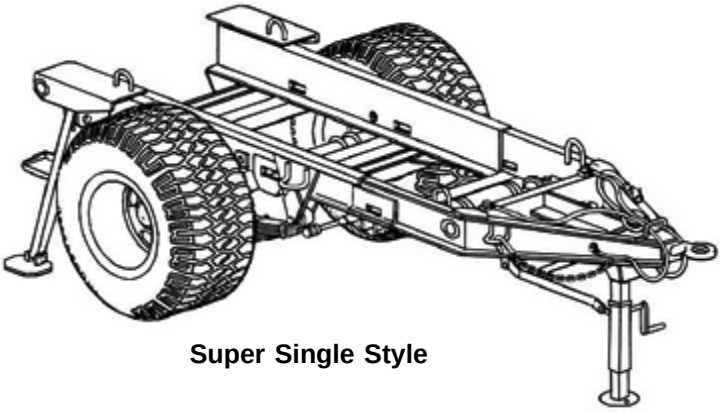

Super Single Style

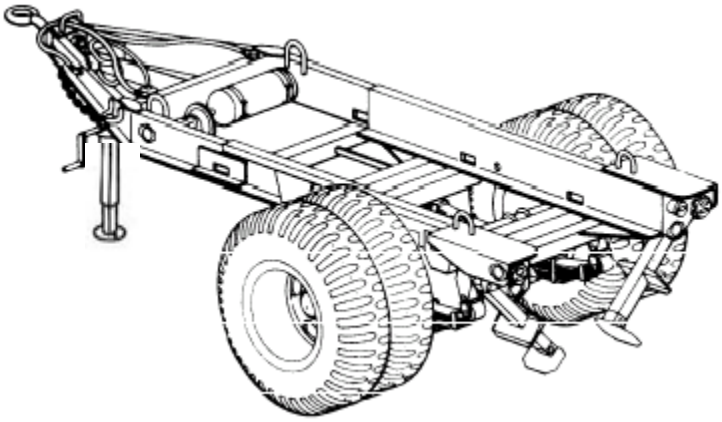

Dual Wheel Style

OPERATING INSTRUCTIONS PAGE 2.1

OPERATOR P M C S PAGE 2-4

OPERATOR MAINTENANCE PAGE 3-1

OPERATOR TROUBLESHOOTING PAGE 3-1

ORGANIZATIONAL MAINTENANCE PAGE 4-1

ORGANIZATIONAL P M C S PAGE 4-7

ORGANIZATIONAL TROUBLESHOOTING PAGE 4-10

DIRECT SUPPORT AND GENERAL SUPPORT MAINTENANCE PAGE 5-1

MAINTENANCE ALLOCATION CHART PAGE B-1

REPAIR PARTS AND SPECIAL TOOLS LIST PAGE F-1

CHASSIS, TRAILER: GENERATOR, 2 1/2-TON, 2-WHEEL, M200A1 (NSN 2330-00-331-2307)

HEADQUARTERS, DEPARTMENT OF THE ARMY
SEPTEMBER 1984

WARNING

Drycleaning solvent PD-680 is both toxic and flammable. Avoid prolonged breathing of vapors and avoid skin contact. Do not use near open flame or excessive heat. Flash point of solvent is 138°F (59°C). Serious illness, injury, or loss of life could result from improper use.

WARNING

Improper cleaning methods and use of unauthorized cleaning liquids or solvents can injure personnel and damage equipment. Refer to TM 9-247.

WARNING

Do not operate the trailer with any burned out or missing lights. Not being seen could result in injury to personnel and damage to equipment.

WARNING

Use care when releasing spring-loaded lower tube of the step jack. The lower tube will return to retracted position with considerable force and can cause injury.

WARNING

All persons not involved in coupling operation must stand clear of towing vehicle and trailer to prevent possible injury.

WARNING

Wear protective goggles to prevent eye injury when opening air reservoir draincock. Move away from airstream to prevent injuries.

WARNING

Particles blown by compressed air are hazardous. Make certain that the airstream is directed away from user and other personnel in the area. User must wear safety eye goggles or face shield to prevent injury when using compressed air. Make certain that air stream is less than 30 psig.

WARNING

Before performing any maintenance tasks on brake system, disconnect trailer air lines from towing vehicle and open draincock to release air pressure from system. Serious injury may result from failure to do so.

WARNING

All parts of the service brake assembly will be coated with asbestos dust from the brake linings. A filter mask should be worn whenever working on any assembly components. Breathing asbestos dust may cause serious damage to health.

WARNING

The return spring inside the brake chamber is under heavy spring tension. The two halves must be clamped together in a vise before removing all the screws and nuts that hold it together. Failure to do so could result in serious injury.

WARNING

Do not raise landing leg assembly unless the trailer is coupled to a towing vehicle or is securely supported on jack stands. The trailer may fall, causing injury to personnel.

TM 9-2330-205-14&P
C2

HEADQUARTERS
DEPARTMENT OF THE ARMY
Washington, D.C., 10 April 2006

CHANGE
NO. 2

Operator's, Organizational,
Direct Support and General Support
Maintenance Manual
(Including Repair Parts and Special Tools List)

CHASSIS, TRAILER: GENERATOR
2-1/2 TON, 2-WHEEL, M200A1
NSN 2330-00-331-2307

TM 9-2330-205-14&P, 11 September 1984, is changed as follows:

1. Remove old pages and insert new pages as indicated.
2. New or changed material is indicated by a vertical bar in the margin of the new page.
3. A Change 2 beside the page number indicates new or changed material. Added or revised illustration pages will also include the Change 2 beside the page number.
4. This change implements Army Maintenance Transformation and change the Maintenance Allocation Chart (MAC) to support Field and Sustainment Maintenance.

Remove Pages	Insert Pages	Remove Pages	Insert Pages
None	A/(B Blank)	4-95 thru 4-97/(4-98 Blank)	4-95 thru 4-97/(4-98 Blank)
i thru iv	i thru iv	5-7 thru 5-11/(5-12 Blank)	None
1-0	1-0	B-1 thru B-7/(B-8 Blank)	B-1 thru B-8
1-3 thru 1-8	1-3 thru 1-8	17-1 thru Fig. 21	17-1 thru Fig. 21
2-1 thru 2-18	2-1 thru 2-18	24-1 and KIT-1	24-1 and KIT-1
3-3 and 3-4	3-3 and 3-4	I-1 thru I-12	I-1 thru I-12
3-7 and 3-8	3-7 and 3-8	I-17 thru I-20	I-17 thru I-20
4-17 and 4-18	4-17 and 4-18	Index 1 thru 4	Index 1 thru 4
4-23 thru 4-28	4-23 thru 4-28	Sample 2028	Sample 2028
4-39 and 4-40	4-39 and 4-40	DA Form 2028	DA Form 2028
4-45 thru 4-48	4-45 thru 4-48	Front Cover	Front Cover
4-57 and 4-58	4-57 and 4-58		
4-61 and 4-62	4-61 and 4-62		
4-83 and 4-84	4-83 and 4-84		
4-87 and 4-88	4-87 and 4-88		

5. File this change sheet in front of publication for reference.

Approved for public release; distribution is unlimited

By Order of the Secretary of the Army:

PETER J. SCHOOMAKER
General, United States Army
Chief of Staff

Official:

JOYCE E. MORROW
Administrative Assistant to the
Secretary of the Army
0606950

DISTRIBUTION: To be distributed in accordance with the initial distribution requirements for IDN: 390612, requirements for TM 9-2330-205-14&P.

CHANGE

NO. 1

HEADQUARTERS
DEPARTMENT OF THE ARMY
WASHINGTON, *DC, 18March1988*

Operator's, Organizational,
Direct Support, and General Support
Maintenance Manual
(Including Repair Parts and Special Tools List)

CHASSIS, TRAILER: GENERATOR
2-1/2 TON, 2-WHEEL, M200A1
(NSN 2330-00-331-2307)
Current as of
1 March 1988

TM 9-2330-205-14&P, 11 September 1984, is changed as follows:

1. Remove old pages and insert new pages as indicated. New or changed material is indicated by a vertical bar in the margin of the page. Added or revised illustrations are indicated by a vertical bar adjacent to the illustration identification number.

Remove Pages	Insert Pages	Remove Pages	Insert Pages
i thru iv	i thru iv	4-45 and 4-46	4-45 and 4–46
2-11 and 2-12	2-11 and 2-12	4-83 thru 4-86	4-83 thru 4-86
4-3 and 4-4	4-3 and 4-4	F-1 thru F-66	1 thru 66
4-11 and 4-12	4-11 and 4-12	Ind3 and Ind4	Ind3 and Ind4

2. File this change sheet in front of publication for reference.

By Order of the Secretary of the Army:

CARL E. VUONO
General, United States Army
Chief of Staff

Official:

R.L. DILWORTH
Brigadier General, United States Army
The Adjutant General

Distribution:

To be distributed in accordance with DA Form 12-39, Operator UniT; Direct and General Support Maintenance requirements for Chassis, Trailer, Generator, 2 1/2 Ton, 2-Wheel, M200A1.

TM 9-2330-205-14&P

INSERT LATEST PAGES. DESTROY SUPERCEEDED DATA.

LIST OF EFFECTIVE PAGES (for Change 2)

Oringinal 11 SEP 84
Change 1 18 MAR 88 Change 2 10 APR 06

TOTAL NUMBER OF PAGES FOR FRONT AND REAR MATTER IS 18 AND TOTAL NUMBER OF PAGES IN CHAPTERS IS 90, CONSISTING OF THE FOLLOWING:

Page No.	***Change No.**
Front Cover/Inside Cover -Blank (2 pages)	2
Title/Authenication (2 pages)	2
Transmittal Page/Remove and Insert Page (2 pages)	2
Warnings/a – b (2 pages)	0
i -iv (4 pages)	2
1-0 through 1-8 (10 pages)	2
2-1 through 2-4 (4 pages)	2
2-7 through 2-18 (12 pages)	2
3-3 through 3-4 (2 pages)	2
3-7 through 3-8 (2 pages)	2
4-17 through 4-18 (2 pages)	2
4-23 through 4-28 (6 pages)	2
4-39 through 4-40 (2 pages)	2
4-45 through 4-48 (4 pages)	2
4-57 through 4-58 (2 pages)	2
4-61 through 4-62 (2 pages)	2
4-83 through 4-84 (2 pages)	2
4-87 through 4-88 (2 pages)	2
4-97 through 4-97 (3 pages)	2
4-98 Blank (1 page)	2
B-5 through B-6 (2 pages)	2
Figure 17 through Figure 20 (5 pages)	2
16-1 thorugh 20-1 ((6 pages)	2
Figure 24 (1 page)	2
24-1/Blank (2 pages)	2
Kit-1/Blank (2 pages)	0
I-1 through I-12 (12 pages)	2
I-17 through I-20 (4 pages)	2
Index (4 pages)	2

*Zero in this column indicates an original page.

TECHNICAL MANUAL

NO. 9-2330-205-14&P, C2

HEADQUARTERS
DEPARTMENT OF THE ARMY
WASHINGTON, DC, 11 September 1984

Operator's, Organlzational, Direct Support, and General Support Maintenance Manual (Including Repair Parts and Speclal Tools List)

CHASSIS, TRAILER: GENERATOR 2 ½ TON, 2-WHEEL, M200Al (NSN 2330-00-331-2307)

Current as of 3 December 2002

REPORTING ERRORS AND RECOMMENDING IMPROVEMENTS

You can help improve this publication. If you find any mistakes or if you know of a way to improve the procedures, please let us know. Submit your DA Form 2028 (Recommended Changes to Publications and Blank Forms), through the Internet, on the Army Electronic Product Support (AEPS) website. The Internet address is http://aeps.ria.army.mil. If you need a password, scroll down and click on "ACCESS REQUEST FORM". The DA Form 2028 is located in the ONLINE FORMS PROCESSING section of the AEPS. Fill out the form and click on SUBMIT. Using this form on the AEPS will enable us to respond quicker to your comments and better manage the DA Form 2028 program. You may also mail, fax or E-mail your letter, DA Form 2028 to: AMSTA-LC-LPIT/TECH PUBS, TACOM-RI, 1 Rock Island Arsenal, Rock Island, IL 61299-7630. The email address is TACOM-TECH-PUBS@ria.army.mil. The fax number is DSN 793-0726 or Commercial (309) 782-0726.

TABLE OF CONTENTS

		Page	Illus Fig.
How to Use This Manual		iv	
CHAPTER 1	INTRODUCTION	1-1	
Section I.	General Information	1-1	
Section II.	Equipment Description and Data	1-2	
Section III.	Principles of Operation	1-6	
CHAPTER 2	OPERATING INSTRUCTIONS	2-1	
Section I.	Description and Use of Operator's Controls	2-1	
Section II.	Operator/Crew Preventive Maintenance Checks and Services (PMCS)	2-4	
Section Ill.	Operation Under Usual Conditions	2-9	
Section IV.	Operation Under Unusual Conditions	2-16	
CHAPTER 3	OPERATOR MAINTENANCE	3-1	
Section I.	Lubrication Instructions	3-1	
Section II.	Operator Troubleshooting Procedures	3-1	
Section III.	Operator Maintenance Procedures	3-3	

Approved for public release; distribution is unlimited.

TABLE OF CONTENTS -CONTINUED

		Page	Illus Fig.
CHAPTER 4	ORGANIZATIONAL MAINTENANCE	4-1	
Section I.	Lubrication Instructions	4-2	
Section II.	Repair Parts, Special Tools; Test, Measurement, and Diagnostic Equipment (TMDE); and Support Equipment	4-5	
Section III.	Service Upon Receipt	4-5	
Section IV.	Organizational Preventive Maintenance Checks and Services (PMCS)	4-7	
Section V.	Organizational Troubleshooting Procedures	4-10	
Section VI.	General Maintenance instructions	4-14	
Section VII.	Electrical System	4-16	
Section VIII.	Axle	4-31	
Section IX.	Brake System	4-36	
Section X.	Wheel, Tire, Hub, and Drum	4-76	
Section Xi.	Frame and Towing Attachment	4-82	
Section Xii.	Spring	4-88	
Section XIII.	Body Accessory	4-93	
Section XIV.	Preparation for Storage and Shipment	4-96	
CHAPTER 5	DIRECT SUPPORT AND GENERAL SUPPORT MAINTENANCE	5-1	
Section I.	Repair Parts, Special Tools; Test, Measurement, and Diagnostic Equipment (TMDE); and Support Equipment	5-1	
Section II.	Maintenance Procedures	5-1	
APPENDIX A	REFERENCES	A-1	
APPENDIX B	MAINTENANCE. ALLOCATION CHART	B-1	
APPENDIX C	COMPONENTS OF END ITEM AND BASIC ISSUE ITEMS LIST	C-1	
APPENDIX D	ADDITIONAL AUTHORIZATION LIST	D-1	
APPENDIX E	EXPENDABLE SUPPLIES AND MATERIALS LIST	E-1	
APPENDIX F	REPAIR PARTS AND SPECIAL TOOLS LIST	1	
Section I.	Introduction	1	
Section II.	Repair Parts List		
Group 06	ELECTRICAL SYSTEM		
	0609 Blackout Stoplight Assembly (Early Models)		1
	0609 Service, Stop, and Tail and Blackout Taillight (Early Models)		2

TABLE OF CONTENTS - CONTINUED

		Page	Illus Fig.
	0609 Rear Composite Marker Light Assembly (Late Models)		3
	0613 Intervehicular Cable		4
	0613 Chassis Wiring Harness for Blackout Stoplight Assembly		5
	0613 Chassis Wiring Harness Service, Stop, Tail, and Blackout Taillight		6
Group 11	REAR AXLE		
	1100 Axle Assembly		7
Group 12	BRAKES		
	1201 Handbrake Lever Mechanism		8
	1202 Brake Assembly		9
	1204 Master Cylinder Hydraulic Brake Assembly		10
	1204 Hydraulic Wheel Cylinder		11
	1204 Hydraulic Brake System		12
	1208 Air Brake System		13
	1208 Air Chamber Assembly		14
	1208 Air Filter		15
	1208 Emergency Relay Valve		16
Group 13	WHEELS		
	1311 Hub and Drum Assembly		17
	1311 Hub and Drum Assembly (for use with Super Single Style)		17A
	1313 Tire and Tube		18
	1313 Tire (for use with Super Single Style)		18A
Group 15	FRAME AND TOWING ATTACHMENTS; LANDING GEAR AND LEVELING JACK		
	1503 Lunette, Safety Chains, and Mounting Support		19
	1507 Landing Leg Assembly		20
	1507 Step Jack Assembly		21
Group 16	SPRINGS AND SHOCK ABSORBERS		
	1601 Spring Assembly		22
Group 22	BODY AND CHASSIS ACCESSORY ITEMS		
	2202 Reflectors		23
	2210 Identification Plates		24
Section III.	Special Tools (Not Applicable)		
Section IV.	National Stock Number and Part Number Index		
APPENDIX G	TORQUE LIMITS	G1	
INDEX		Index-1	

HOW TO USE THIS MANUAL

This manual is designed to help you operate and maintain the M200A1 Generator Trailer. The front cover table of contents is provided for quick reference to important information. There is also an index located in the final pages for use in locating specific items of information.

Measurements in this manual are given in both US standard and metric units. A metric to US standard conversion chart can be found on the inside back cover.

Read all preliminary information found at the beginning of each task. It has important Information and safety instructions you must follow before beginning the task.

Warning pages are located in the front of this manual. You should read the warnings Before operating or doing maintenance on the equipment.

A subject index appears at the beginning of each chapter listing sections that are included in that chapter. A more specific subject index is located at the beginning of each section to help you find the exact paragraph you're looking for.

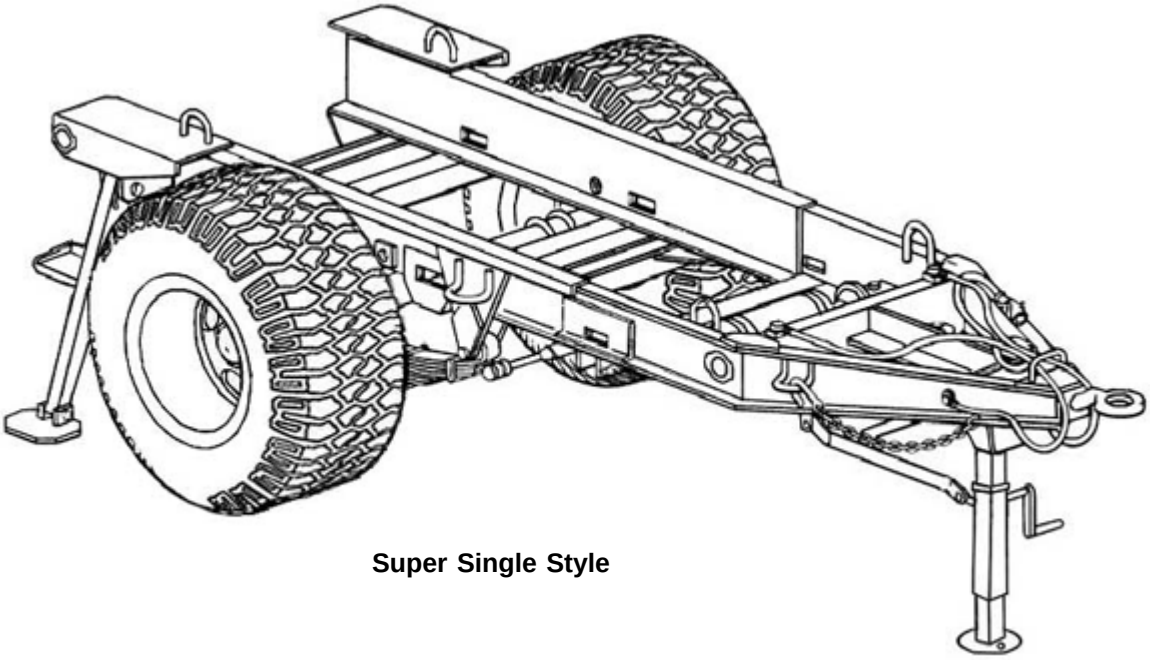

Super Single Style

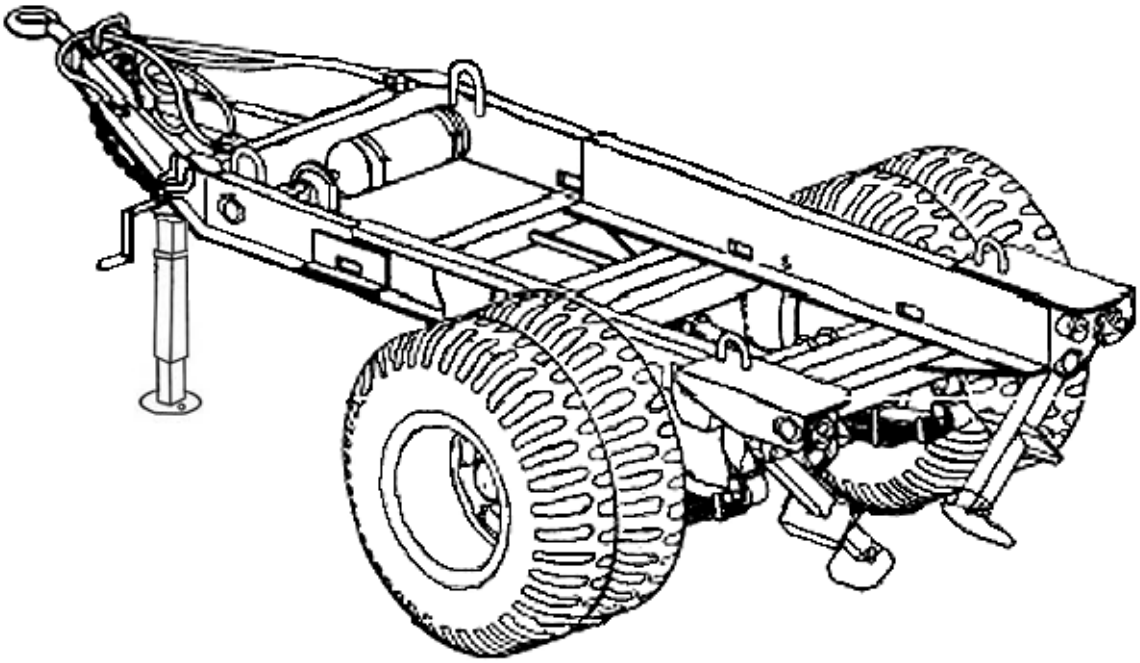

Dual Wheel Style

CHAPTER 1

INTRODUCTION

OVERVIEW

The purpose of this chapter is to give you information on the generator trailer chassis size, shape, major equipment, and how it works.

		Page
Section I.	General Information	1-1
Section II.	Equipment Description and Data	1-2
Section III.	Principles of Operation	1-6

Section L GENERAL INFORMATION

	Page
Destruction of Army Materiel to Prevent Enemy Use	1-1
Maintenance Forms and Records	1-1
Nomenclature Cross-Reference List	1-2
Preparation for Storage and Shipment	1-2
Reporting Equipment Improvement Recommendations (EIRs)	1-2
Scope	1-1

SCOPE

Type of Manual: Operator's, Organizational, Direct Support, and General Support Maintenance Manual (Including Repair Parts and Special Tools Lists).

Model Number and Equipment Name: M200A1 Chassis, Trailer: Generator, 2 1/2-Ton, 2-Wheel.

Purpose of Equipment: The trailer is used to transport electric generators. It can be used on improved and unimproved roads.

MAINTENANCE FORMS AND RECORDS

Department of the Army forms and procedures used for equipment maintenance will be those prescribed by TM 38-750, The Army Maintenance Management System (TAMMS).

DESTRUCTION OF ARMY MATERIEL TO PREVENT ENEMY USE

Refer to TM 750-244-6, Procedures for Destruction of Tank-Automotive Equipment to Prevent Enemy Use (US Army Tank-Automotive Command).

PREPARATION FOR STORAGE AND SHIPMENT

See chapter 4, section XIV for instructions for the preparation for storage or shipment.

REPORTING EQUIPMENT IMPROVEMENT RECOMMENDATIONS (EIRs)

If your generator trailer needs improvement, let us know. Send us an EIR. You, the user, are the only one who can tell us what you don't like about your equipment. Let us know why you don't like the design. Put it on an SF 368 (Quality Deficiency Report). Mail it to Commander, US Army Tank-Automotive Command, Attn: DRSTA-MP, Warren Ml 48090. We will send you a reply.

NOMENCLATURE CROSS-REFERENCE LIST

Common Name	Official Nomenclature
Tow hook	Pintle
Tow ring	Coupler, drawbar, lunette, ring

Section IL EQUIPMENT DESCRIPTION AND DATA

	Page
Equipment Characteristics, Capabilities, and Features	1-2
Equipment Data	1-5
Location and Description of Major Components	1-3

EQUIPMENT CHARACTERISTICS, CAPABILITIES, AND FEATURES

PURPOSE OF M200A1 GENERATOR TRAILER CHASSIS

An open-frame, single-axle, four-wheeled trailer chassis designed to transport an electric generator.

CAPABILITIES AND FEATURES

Load Capacity:

Highway, 7000 lb (3158 kg)
Cross country, 5000 lb (2270 kg)

May be towed by a 2 1/2-ton, 6 x 6, M35 cargo truck or similar vehicle.

Speed is restricted to 55 mph (88.5 km/h) on improved roads and 30 mph (48.3 km/h) on unimproved roads or cross country.

It can ford hard-bottom water crossings to any depth that can be negotiated by the towing vehicle.

LOCATION AND DESCRIPTION OF MAJOR COMPONENTS

LANDING LEG

The landing leg supports the front of the trailer when uncoupled and can be used to raise or lower the front of the trailer.

The crank handle drives the gearbox, which extends or retracts the landing leg.

The landing leg and back brace are locked in the down position or in the folded back and stowed position by a Lockpin.

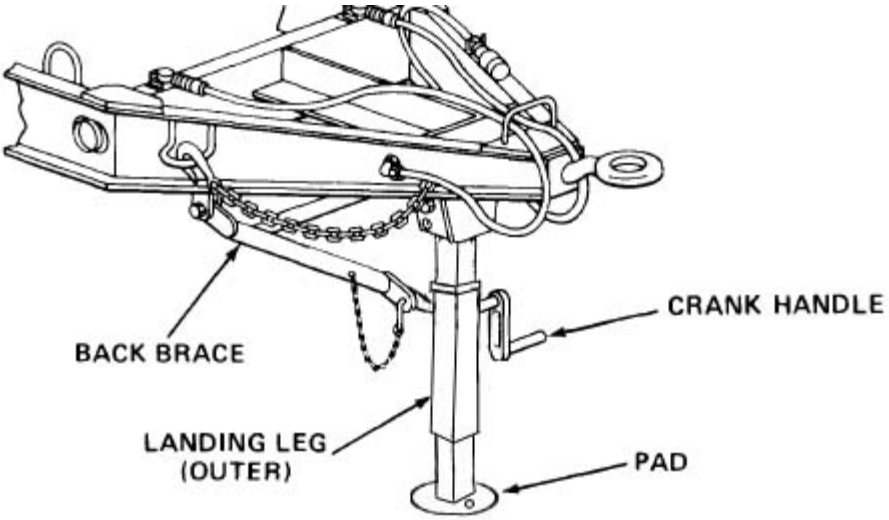

DATA PLATES

There are two data plates on the right front frame. They provide identification, registration, dimension, and weight information.

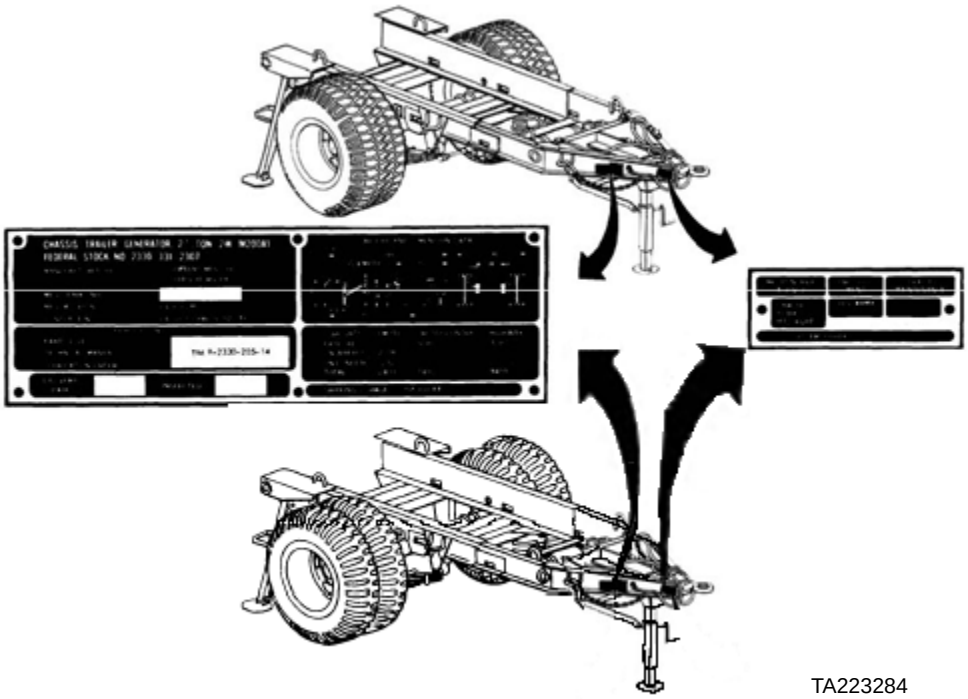

TA223284

LOCATION AND DESCRIPTION OF MAJOR COMPONENTS - CONTINUED

ELECTRICAL SYSTEM

The electrical system is the 24-volt military vehicle system with an intervehicular cable to connect the trailer to the towing vehicle.

The taillights and composite lights provide stopping and turning signals.

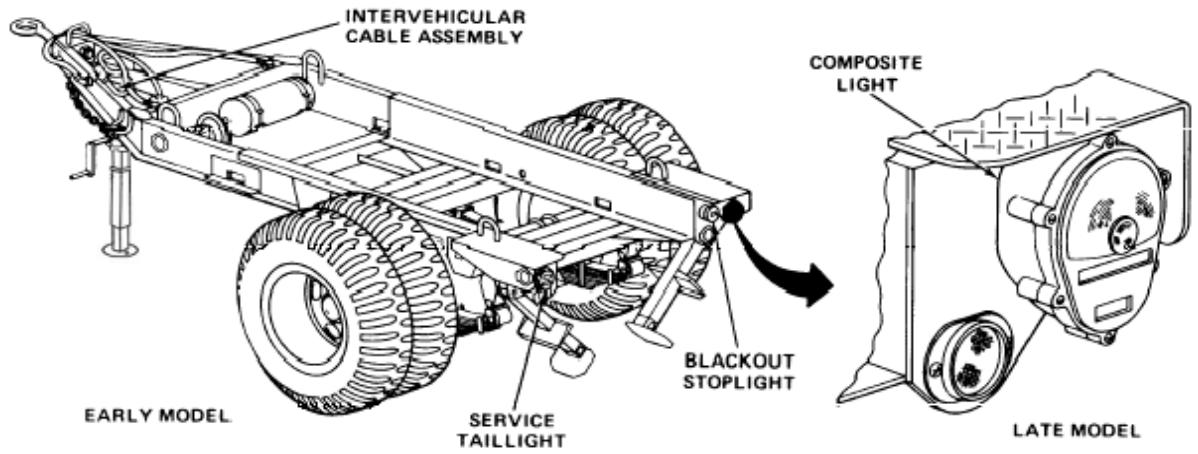

STEP JACKS

The step jacks are located at the left- and right-rear corners of the chassis and serve as stabilizers when the chassis is uncoupled from the towing vehicle.
Each step jack has a step to provide access to upper parts of mounted equipment.

Each step jack has an adjustable spring-loaded lower tube with a hinged pad attached to its base. The lower tube telescopes within the step tube and can be locked in any of seven positions by the latch.

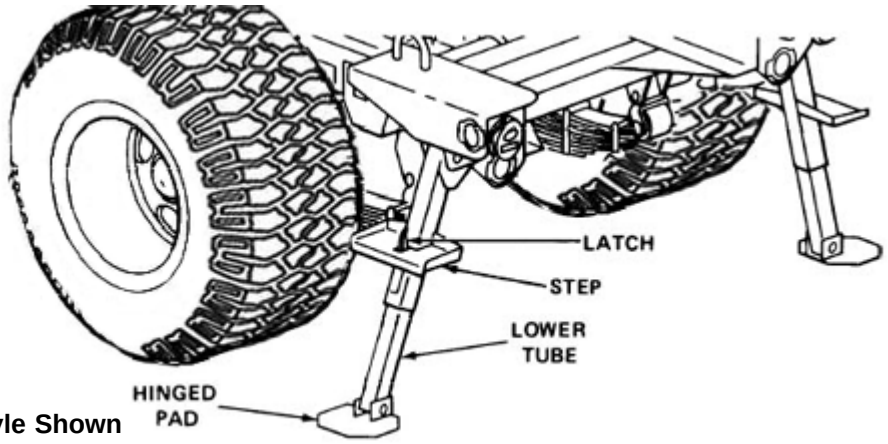

Super Single Style Shown

TA223285

LOCATION AND DESCRIPTION OF MAJOR COMPONENTS - CONTINUED

BRAKE SYSTEM

The brake system is an air-actuated, hydraulically operated system.

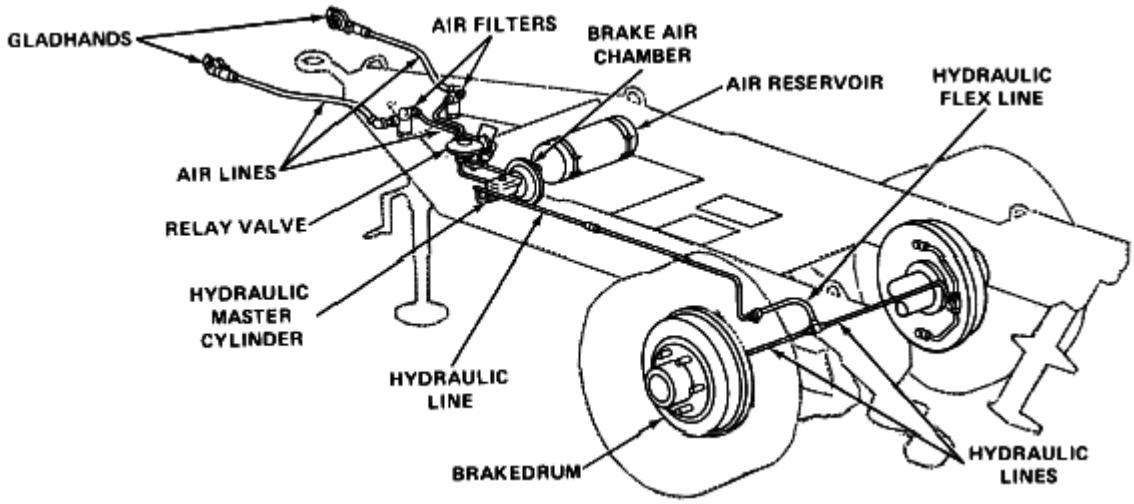

EQUIPMENT DATA

Axle	
Type	Tubular
Diameter	4 1/2.(114 mm)
Spindle dia.	2 13/16 in. (52 mm)
Brakes	
Type	Air over hydraulic
Operating pressure	60 psi (414 kPa) minimum
Size, diameter	16.0705 in. (408 mm)
Size, width	3 in. (76 mm)
Type mechanism	2-shoe, self-centering, expanding double-cylinder actuation
Electrical system, 24-volt	
Lamps, blackout	3 cp
Lamps, service	32 cp
Frame	
Material	Welded pressed steel
Height	38 in. (965 mm)
Handbrakes	
Actuation	Mechanical hand levers
Location	Forward side rails

TA223286

EQUIPMENT DATA - CONTINUED

THIS PAGE CONTAINS DATA FOR THE SUPER SINGLE STYLE ONLY. THE DATA FOR THE OLDER STYLE M200 SERIES TRAILER IS ON PAGE 1-6.

Landing leg	
Length extended	31 in. (787 mm)
Length retracted	23 in. (584 mm)
Springs	
Material	Steel alloy
Number of leaves	14
Type	Semielliptical
Tires (Super Single Models)	
Number (Including Spare)	3
Size	10R22.5
Inflation (cross country)	70 psi (483 kPa)
(highway)	70 psi (483 kPa)
(mud, snow, and sand)	70 psi (483 kPa)
Type (Manufacturer)	Goodyear Tire and Rubber Co.
Weights and dimensions	
Length (to center of lunette)	162 1/5 in. (411 cm)
Width (overall)	89 in. (236 cm)
Height (top of tires)	37.75 in. (100 cm)
Weight (empty)	2015 lb (1093 kg)
Payload (cross country)	5000 lb (2268 kg)
(highway)	7000 lb (3175 kg)
Angle of departure	30-degree slope
Wheels	
Number of studs	6 each Rim
Manufacturer	Pribbs Steel & Mfg., Inc.
Rim Size	7.5x22.5in. (19x57cm)
Number (Including Spare)	3

EQUIPMENT DATA - CONTINUED

Landing leg	
Length extended	31 in. (787 mm)
Length retracted	23 in. (584 mm)
Springs	
Material	Steel alloy
Number of leaves	14
Type	Semielliptical
Tires	
Number	4
Number of plies	8
Size	9.00 x 20
Inflation (cross country)	20 psi (138 kPa)
(highway)	35 psi (241 kPa)
(mud, snow, and sand)	15 psi (103 kPa)
Type	Military pneumatic
Weights and dimensions	
Length (to center of lunette)	161 7/8 in. (411 cm)
Width (overall)	93 in. (236 cm)
Height (top of tires)	40 in. (102 cm)
Weight (empty)	2410 lb (1093 kg)
Payload (cross country)	5000 lb (2268 kg)
(highway)	7000 lb (3175 kg)
Angle of departure	30-degree slope
Wheels	
Diameter of stud circle	8.743 in. (222 mm)
Number of studs	6 each
Rim size	20 x 7.5
Tire retention	Split ring
Type	Offset disk
Bearing type	Tapered roller
Number	4

Section III. PRINCIPLES OF OPERATION

	Page		Page
Brake System	1-7	Electrical System	1-8

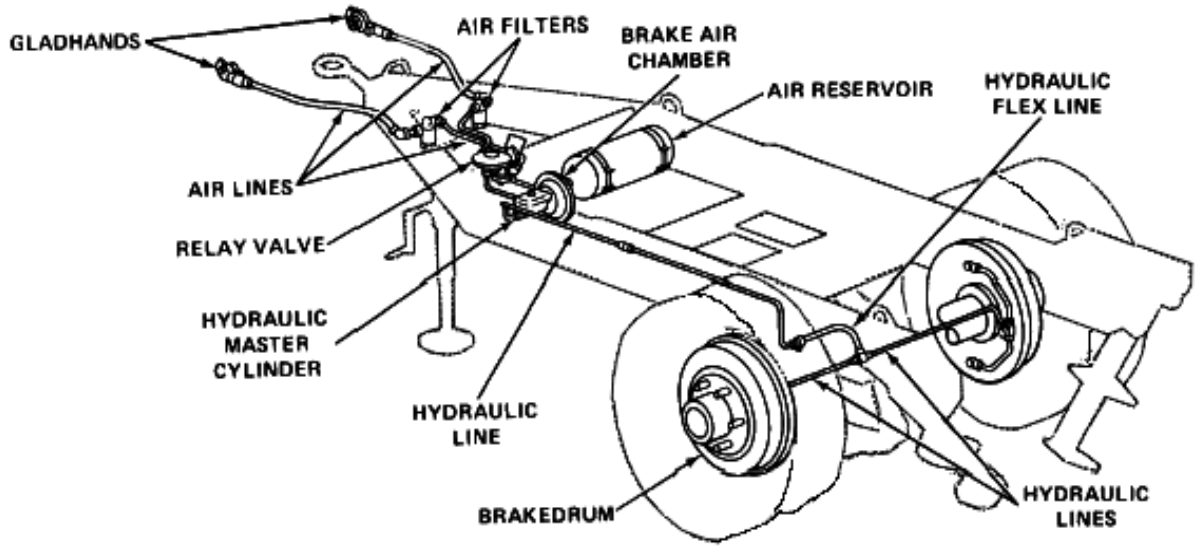

Gladhands - The gladhands are the coupling point for the trailer to towing vehicle. They are marked, one for emergency and the other for service, to ensure correct hookup.

Air Filters - The air filters clean air from towing vehicle of moisture and foreign matter,

Air Lines - The air lines extend from the air filters to supply service and emergency air to the relay valve, air reservoir, and brake air chamber.

Relay Valve - Controls the braking system of the trailer. Based on the air pressure signals received from the towing vehicle, it will apply or release the service brakes or it will initiate an emergency brake application.

Air Reservoir - The air reservoir stores the system air pressure (60 psi (413.7 kPa) minimum) that operates the brake system. Pressure to the reservoir is initially supplied and then maintained through the emergency supply line from the towing vehicle through the relay valve.

Brake Air Chamber - The brake air chamber converts air pressure to mechanical motion. This movement, through the hydraulic master cylinder, applies the brakes. When air pressure in the brake air chamber is released, spring action releases the brakes.

Hydraulic Master Cylinder - The hydraulic master cylinder converts the mechanical motion of the brake air chamber to hydraulic pressure.

Wheel Cylinders - The wheel cylinders convert system hydraulic pressure to mechanical motion and force the brake lining against the brakedrum.

Brakeshoes - The two brakeshoes on each wheel assembly are spread apart by the mechanical movement of the wheel cylinders. The brakeshoes cause friction to slow or stop the trailer.

TA223287

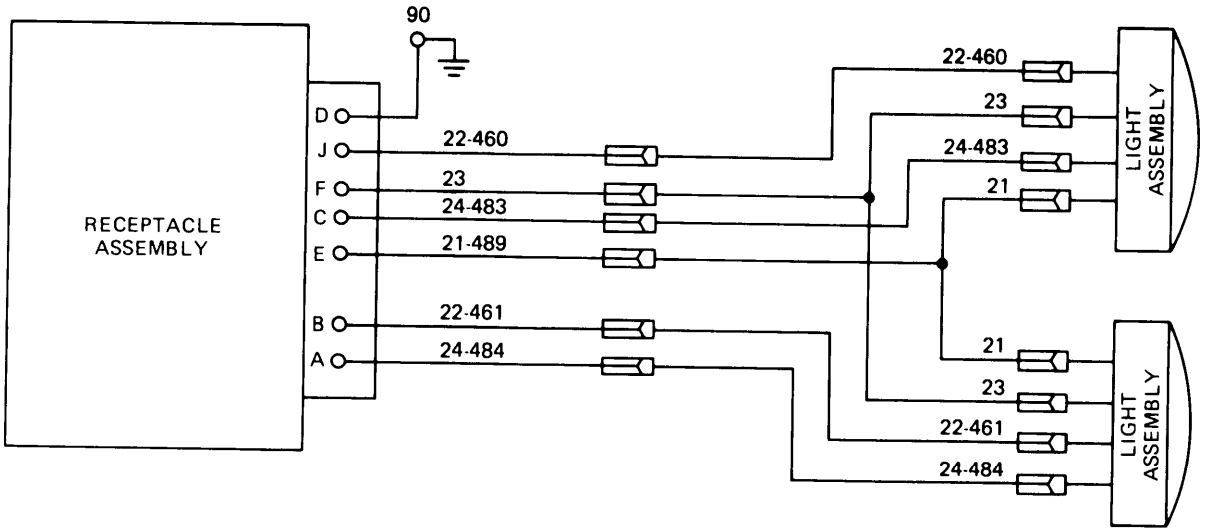

The light assemblies receive power to operate from the towing vehicle through the intervehicular cable and the main chassis harness.

TA224447

CHAPTER 2
OPERATING INSTRUCTIONS

OVERVIEW

This chapter shows and describes the trailer controls and contains operator/crew level preventive maintenance procedures. There are instructions for coupling trailer to towing vehicle, driving, stopping, and backing, operation in both usual and unusual conditions, and other information to help you understand and better operate the trailer.

	Page
Section I. Description and Use of Operator's Controls	2-1
Section II. Operator/Crew Preventive Maintenance Checks and Services (PMCS)	2-4
Section III. Operation Under Usual Conditions	2-9
Section IV. Operation Under Unusual Conditions	2-16

Section I. DESCRIPTION AND USE OF OPERATOR'S CONTROLS

	Page		Page
Air Reservoir	2-1	Step Jack	2-3
Handbrakes	2-2	Trailer-to-Towing Vehicle Connectors	2-3
Landing Leg	2-4		
Lunette and Safety Chain	2-2		

AIR RESERVOIR

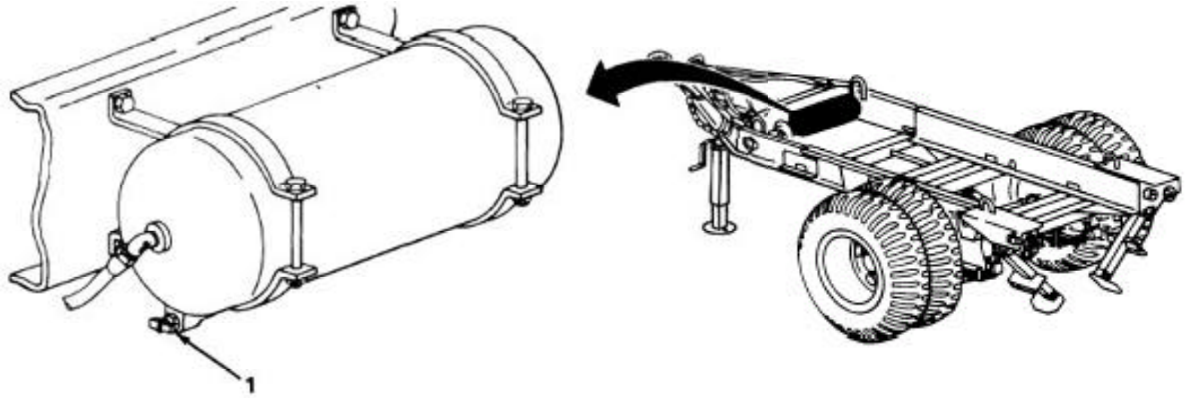

KEY	CONTROL OR INDICATOR	FUNCTION
1	Draincock	Used to drain accumulation of moisture and to release air pressure in the event of locked brakes.

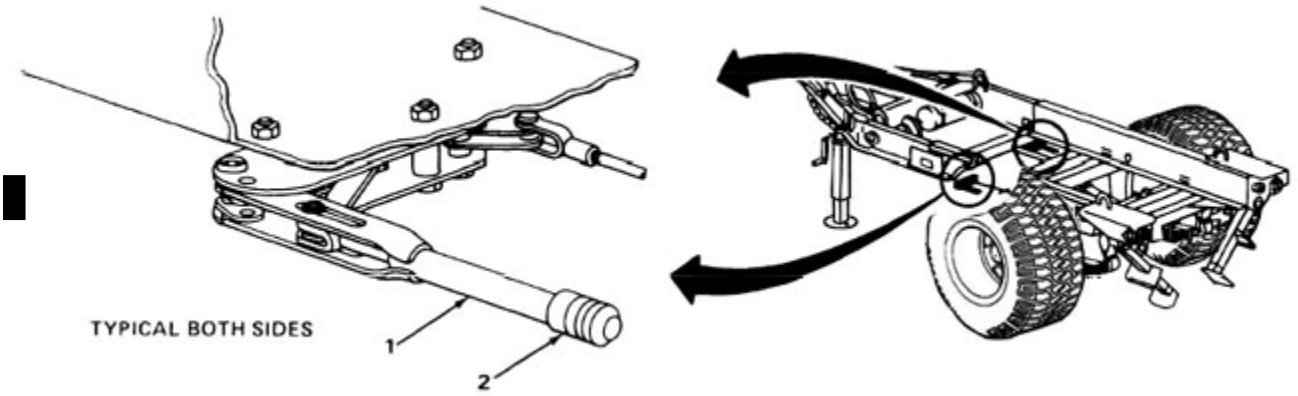

Super Single Style Shown

KEY	CONTROL OR INDICATOR	FUNCTION
1	Handbrake lever	The handbrake lever assemblies are used to apply or release the handbrakes.
2	Adjustment knobs	Use to adjust cable tension.

LUNETTE AND SAFETY CHAIN

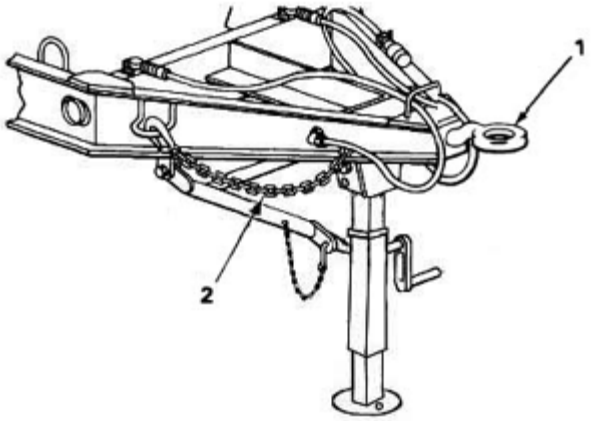

KEY	CONTROL OR INDICATOR	FUNCTION
1	Lunette	Used to couple the trailer to the towing vehicle.
2	Safety chain	Hooked to eyebolts on towing vehicle to prevent trailer from fully breaking away.

TA223289

TRAILER-TO-TOWING VEHICLE CONNECTORS

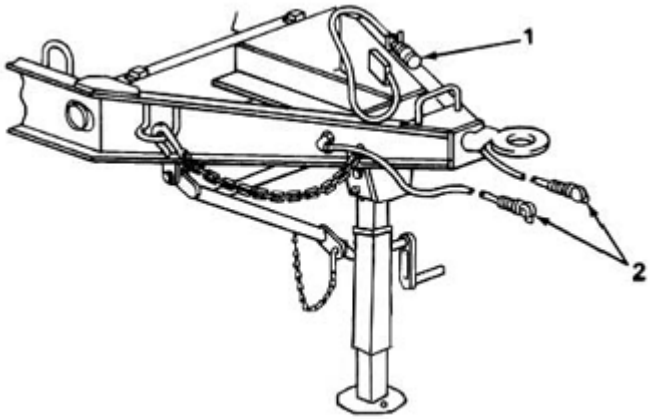

KEY	CONTROL OR INDICATOR	FUNCTION
1	Intervehicular cable	Provides the connection between the towing vehicle connector and the trailer electrical system.
2	Service and emergency	Provide the connections between the towing vehicle's gladhands air supply and the trailer.

STEP JACK

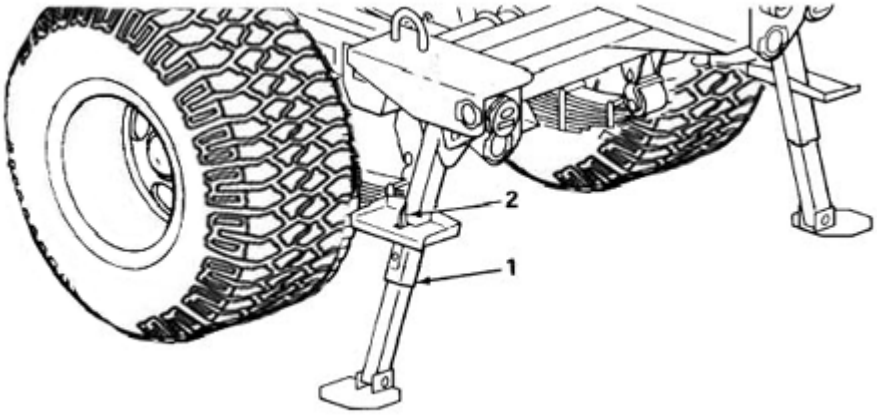

Super Single Style Shown

KEY	CONTROL OR INDICATOR	FUNCTION
1	Step jack	Acts as a stabilizer at the rear of the trailer and provides a step to gain access to upper parts of equipment mounted on trailer.
2	Latch Locks	Lower tube in any of seven positions.

TA223290

LANDING LEG

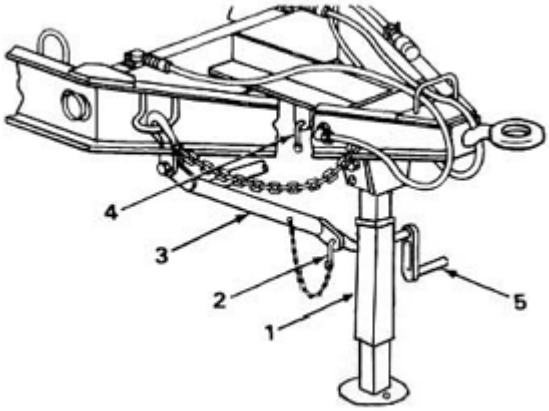

KEY	CONTROL OR INDICATOR	FUNCTION
1	Landing leg	Provides support for forward end of chassis when not coupled to a towing vehicle.
2	Lockpin	Attaches back brace to landing leg to secure landing leg in the down position,
3	Back brace	Provides fore and aft stability for the landing leg.
4	Lockpin	Locks the landing leg in the folded position.
5	Crank handle	Operates the gearbox. Turning crank clockwise retracts shoe assembly, lowering trailer. Turning crank counterclockwise extends shoe assembly, raising trailer.

Section II. OPERATOR/CREW PREVENTIVE MAINTENANCE CHECKS AND SERVICES (PMCS)

	Page
General	2-5
Leakage Definitions	2-6
Operator/Crew Preventive Maintenance Checks and Services	2-6
PMCS Column Description	2-6
Special Instructions	2-5

TA223291

GENERAL

This section contains instructions for performing PMCS on the trailer. The procedure lists checks, services, and criteria to ensure that the trailer is prepared for operation. Perform the checks and services at the specified intervals, keeping in mind the following guidelines:

Do your before (B) PMCS just before operating the vehicle. Pay attention to CAUTIONS and WARNINGS.

Do your during (D) PMCS while operating the vehicle. During means to monitor the vehicle and its related parts while being operated.

Do your after (A) PMCS right after operating the vehicle. Pay attention to CAUTIONS and WARNINGS.

SPECIAL INSTRUCTIONS

If something doesn't work, troubleshoot it with the instructions in this manual and notify your supervisor.

Always do your preventive maintenance in the same order so it gets to be a habit. Once you've had some practice, you'll spot anything wrong in a hurry.

If anything looks wrong and you can't fix it, write it on a DA Form 2404. if you find something seriously wrong, report it to organizational maintenance immediately.

When you do your preventive maintenance, take along the tools you need to make all the checks. You always need a rag or two.

WARNING

Drycleaning solvent PD-680 is both toxic and flammable. Avoid prolonged breathing of vapors and avoid skin contact. Do not use near open flame or excessive heat. Flash point of solvent is 138°F (59°C). Serious illness, injury, or loss of life could result from improper use.

Keep it Clean. Dirt, grease, oil, and debris only get in the way and may cover up a serious problem. Clean as you work and as needed. Use drycleaning solvent PD-680 on all metal surfaces. Use soap and water to clean rubber or plastic material.

Bolts, Nuts, and Screws. Check that they are not loose, missing, bent, or broken. Look for chipped paint, bare metal, or rust around boltheads. Report loose nuts and bolts to organizational maintenance.

Welds. Look for loose or chipped paint, rust, or gaps where parts are welded together. Report bad welds to organizational maintenance.

Electric Wires and Connectors. Look for cracked or broken insulation, bare wires, and loose or broken connectors. Report loose connections and faulty wiring to organizational maintenance.

Hoses and Air Lines. Look for wear, damage, or leaks. Make sure clamps and fittings are tight. If a leak comes from a loose fitting or connector, or if something is broken or worn out, notify organizational maintenance.

LEAKAGE DEFINITIONS

It is necessary for you to know how fluid leaks affect the status of the trailer. The following are definitions of the types/classes of leakage needed to determine the status of the trailer. Become familiar with them. When in doubt, notify your supervisor.

Class I – Seepage of fluid (indicated by wetness or discoloration) not great enough to form drops.
Class II – Leakage of fluid great enough to form drops, but not enough to cause drops to fall.
Class Ill – Leakage of fluid great enough to form drops that fall.

CAUTION

When operating with class I or II leaks, check fluid levels more often than that required in the PMCS. Hydraulic brake systems with leaks will stop working if fluid levels are not maintained.

Equipment operation is allowable with minor leaks (class I or II). Consideration must be given to the fluid capacity of the trailer hydraulic system. Notify your supervisor when in doubt.

Class Ill leaks must be reported to your supervisor or organizational maintenance.

PMCS COLUMN DESCRIPTION

Item No. – The order that PMCS should be performed, and also used as a source of item numbers for the TM number column on DA Form 2404, Equipment Inspection and Maintenance Worksheet, when recording results of PMCS.

Interval – Tells when each check is to be performed.

Hem To Be Inspected – Lists the check to be performed.

Equipment Is Not Ready/Available If – Has an entry only when the trailer should not be operated or accepted with that problem.

OPERATOR/CREW PREVENTIVE MAINTENANCE CHECKS AND SERVICES

B-BEFORE D-DURING A-AFTER

ITEM NO.	INTERVAL B	INTERVAL D	INTERVAL A	ITEM TO BE INSPECTED PROCEDURE: CHECK FOR AND HAVE REPAIRED, FILLED, OR ADJUSTED AS NEEDED	EQUIPMENT IS NOT READY/AVAILABLE IF:
1.				TIRES (1)	
	●			a. Check for excessive wear and damage.	Tires are unserviceable.
	●		●	b. Remove any glass, nails, or stones.	

OPERATOR/CREW PREVENTIVE MAINTENANCE CHECKS AND SERVICES - CONTINUED

B-BEFORE D-DURING A-AFTER

ITEM NO.	INTERVAL B	INTERVAL D	INTERVAL A	ITEM TO BE INSPECTED PROCEDURE: CHECK FOR AND HAVE REPAIRED, FILLED, OR ADJUSTED AS NEEDED	EQUIPMENT IS NOT READY/AVAILABLE IF:
	*			c. Gage and inflate to 70 psi (483 kPa).	
2.	*			WHEELS	
				Check for missing or loose wheel capnuts (2).	Capnuts loose or missing.
3.	*			SERVICE BRAKE SYSTEM	
				Check for evidence of fluid leaks at master cylinder (3), brake lines (4), and backing plates (5).	Class III leakage is evident.

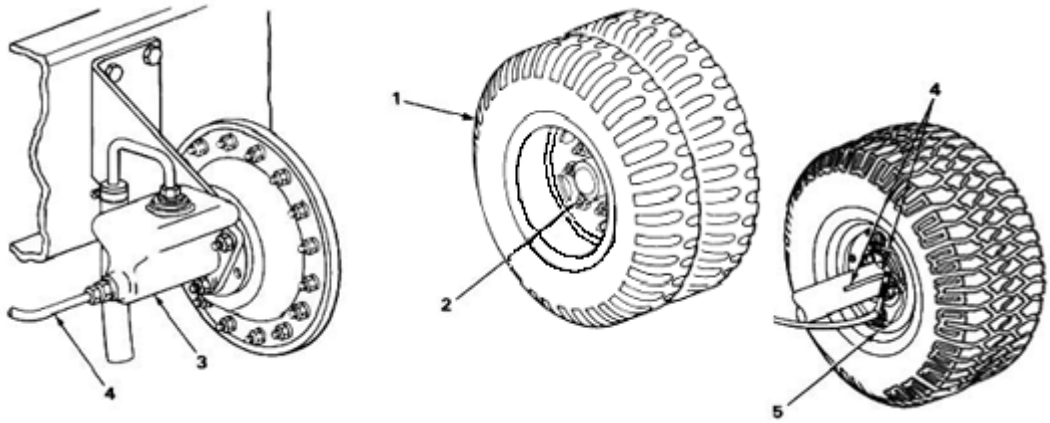

Both Styles Shown

4.	*			LIGHTS AND REFLECTORS	
				Check for missing or damaged components.	Lights or reflectors damaged or missing.

OPERATOR/CREW PREVENTIVE MAINTENANCE CHECKS AND SERVICES - CONTINUED

B-BEFORE D-DURING A-AFTER

ITEM NO.	INTERVAL B	INTERVAL D	INTERVAL A	ITEM TO BE INSPECTED PROCEDURE: CHECK FOR AND HAVE REPAIRED, FILLED, OR ADJUSTED AS NEEDED	EQUIPMENT IS NOT READY/AVAILABLE IF:
5.	*			LUNETTE, AIRHOSES, INTERVEHICULAR CABLE, AND SAFETY CHAINS	
				Check condition of Lunette (1), air-hoses (2), cable (3), and chains (4).	Parts are unserviceable.
6.	*			LANDING LEG AND STEP JACK	
				Check condition of landing leg (5) and step jacks (6).	Indication a leg might collapse.

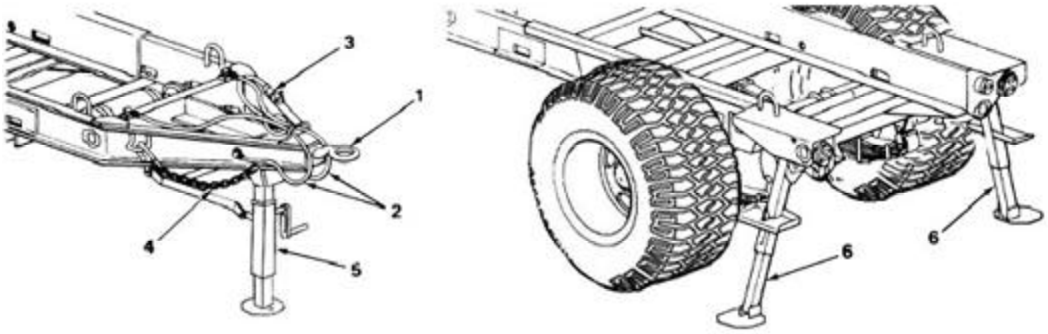

Super Single Style Shown

7.	*			HANDBRAKES	
				Check operation and adjust (page 3-4).	
8.		*		BRAKES	
				Check for proper operation.	Brakes will not hold.
9.		*		SUSPENSION AND LOAD	
				a. Listen for unusual noise.	
				b. Check for defective suspension or shifting load.	

TA223293

OPERATOR/CREW Preventive Maintenance CHECKS AND SERVICES - CONTINUED

B-BEFORE D-DURING A-AFTER

ITEM NO.	INTERVAL B	INTERVAL D	INTERVAL A	ITEM TO BE INSPECTED PROCEDURE: CHECK FOR AND HAVE REPAIRED, FILLED, OR ADJUSTED AS NEEDED	EQUIPMENT IS NOT READY/AVAILABLE IF:
10.		*		AIR RESERVOIR Open draincock (1) to drain reservoir and close when finished.	
11.			*	FRAME AND SUSPENSION Check frame and suspension for damage.	

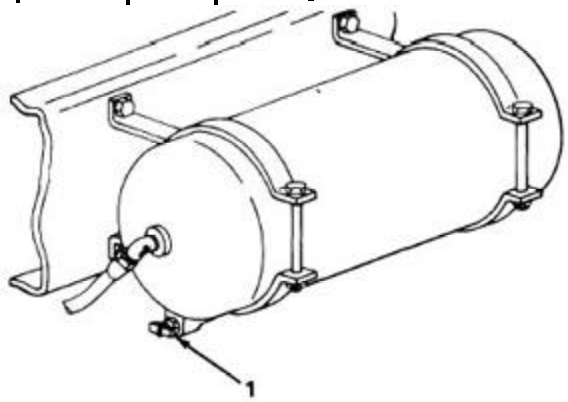

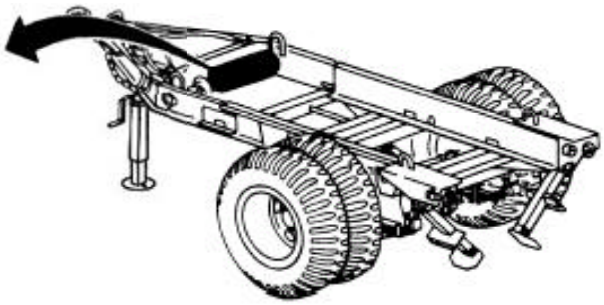

Section III. OPERATION UNDER USUAL CONDITIONS

	Page		Page
After Use	2-14	Preparation for Use	2-9
Operation	2-13		

PREPARATION FOR USE

Perform the operator/crew preventive maintenance checks and services in the Before (B) column before continuing with the following procedures.

WARNING

All persons not involved in coupling operation must stand clear of towing vehicle and trailer to prevent possible injury.

1. Review and perform towing vehicle operating procedures to prepare towing vehicle for coupling.

TA223294

PREPARATION FOR USE - CONTINUED

NOTE

Use an assistant to direct you while backing up.

2. Align towing vehicle with trailer.

3. Slowly back towing vehicle until Lunette (1) and pintle (2) engage.

4. Install pintle Lockpin (3).

5. Attach safety chains (4) from trailer to towing vehicle by crossing chain under Lunette to opposite side eyebolt.

6. Connect trailer intervehicular cable (5) to towing vehicle.

7. Connect trailer service (7) and emergency (6) airhose gladhands to towing vehicle gladhands (8 and 9).

8. Check airhose gladhands (6 and 7) and intervehicular cable (5) connector for security.

9. Turn on towing vehicle air supply to pressurize the brake system air reservoir (10).

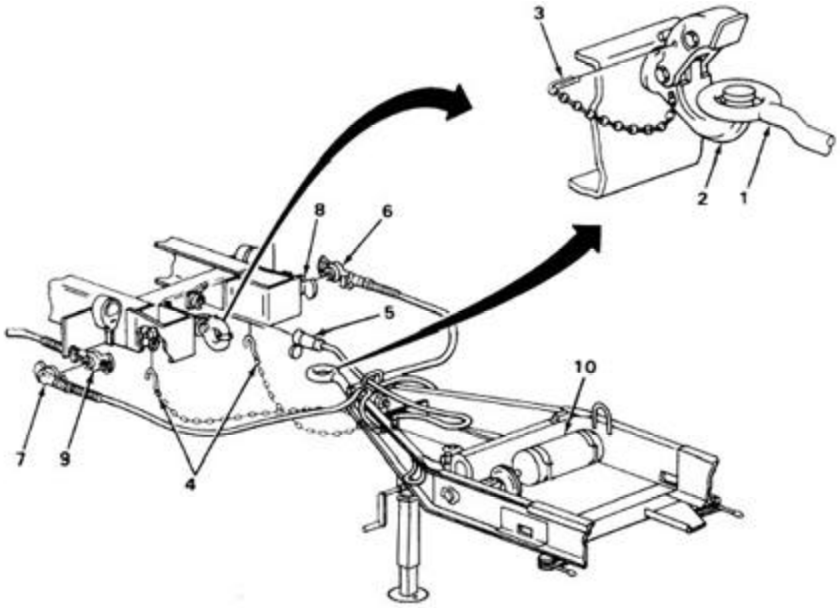

10. Turn on service Lights in towing vehicle and check that all taillights (11) are working.

TA223295

PREPARATION FOR USE - CONTINUED

11. Have an assistant turn on turn signals and apply service brakes. Check that taillights/composite lights (11) flash and brake lights light.

12. Check blackout portions of taillights/composite lights (11) for proper operation. Also check operation of blackout stoplight (12) if equipped.

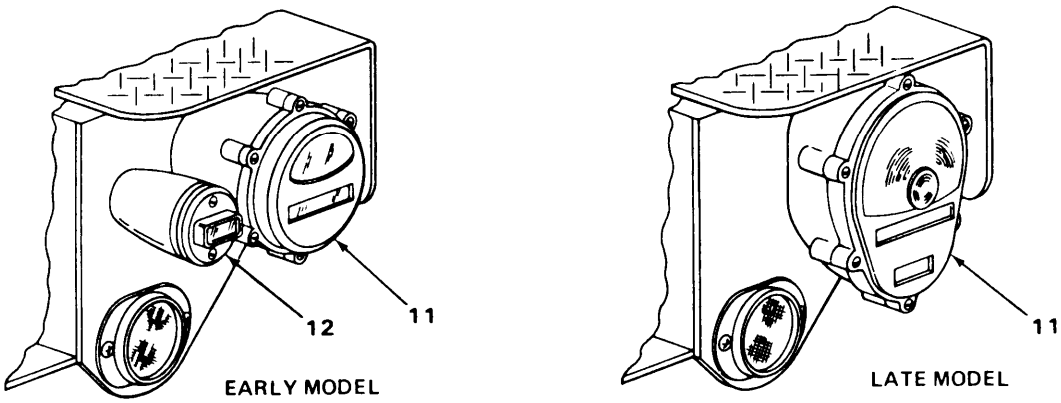

WARNING

Use care when releasing spring-loaded lower tube of step jack. The lower tube will return to retracted position with considerable force and can cause injury.

13. Release lower tube latches (13).

14. Remove retaining pins (14).

15. Remove step jack lockpins (15).

16. Swing step jacks inward and install lockpins (15).

17. Install retaining pins (14).

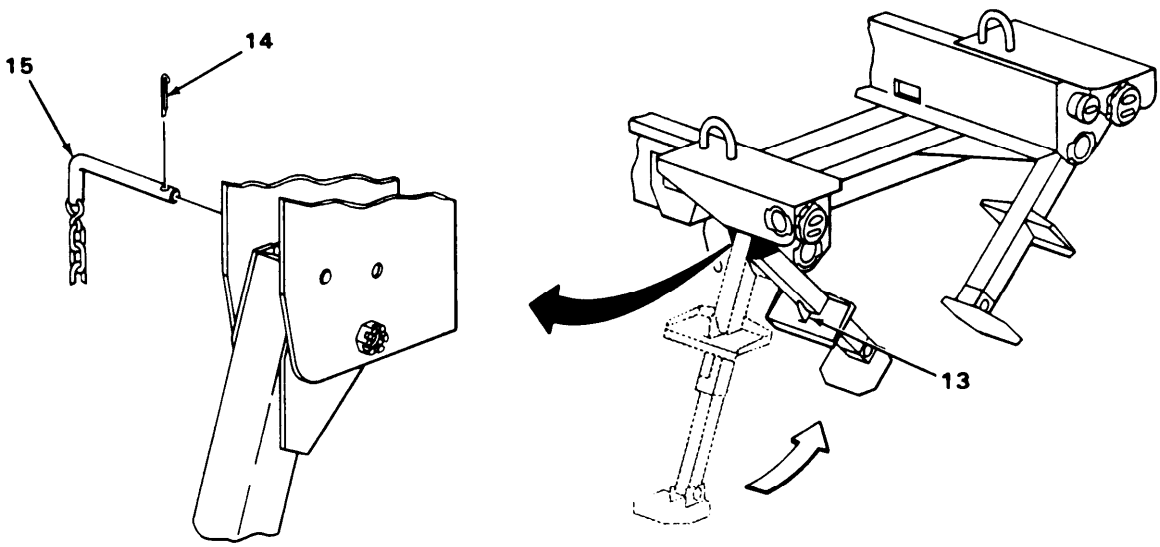

TA223296

PREPARATION FOR USE - CONTINUED

WARNING

Do not raise landing leg assembly unless trailer is connected to a towing vehicle or is securely supported on jack stands. The trailer may fall, causing injury to personnel.

18. Rotate crank handle (1) until landing leg (2) is fully retracted.

19. Position crank handle (1) at its lowest point of rotation.

20. Remove retaining pin (3) and lockpin (4) securing back brace (5) to landing leg (2).

21. Allow back brace (5) to swing down.

22. Rotate landing leg (2) back and up to its stowed position.

23. Install lockpin (6) and retaining pin (7) through landing leg (2) and frame bracket.

24. Swing back brace (5) forward and up and install lockpin (4) and retaining pin (3).

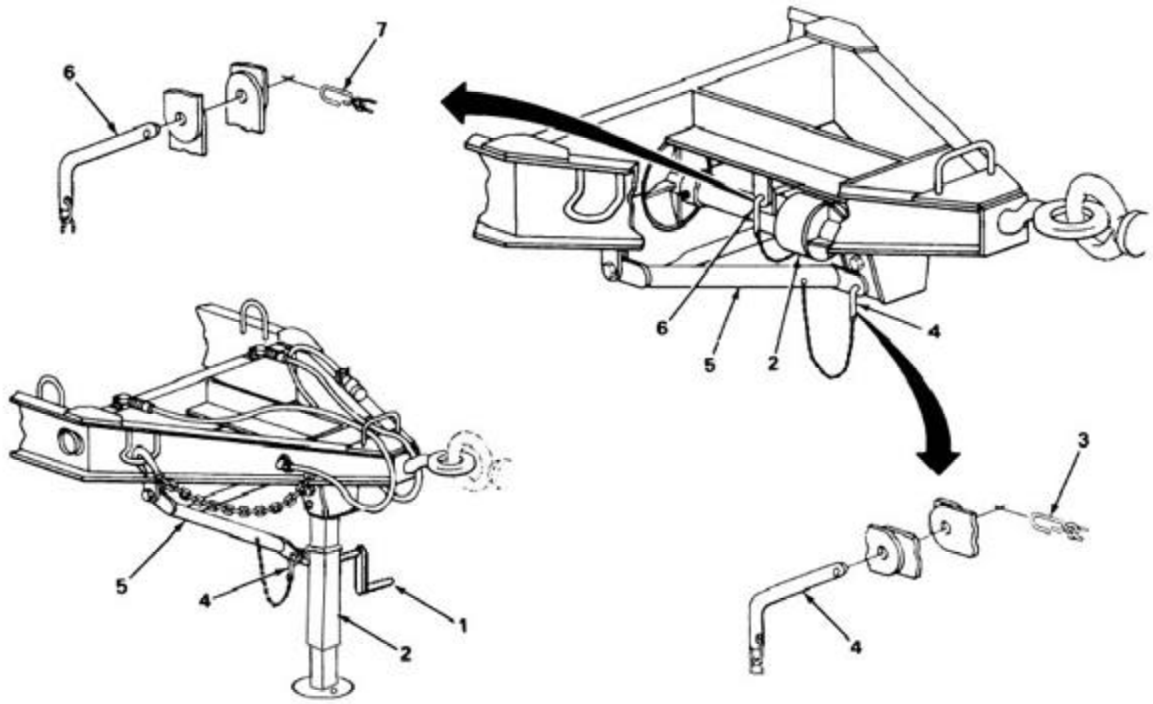

25. Release handbrake levers (8).

26. Have an assistant apply and release towing vehicle service brakes.

27. Check that trailer relay valve (9) vents with each application and release of towing vehicle service brakes. Venting of air should be heard.

PREPARATION FOR USE - CONTINUED

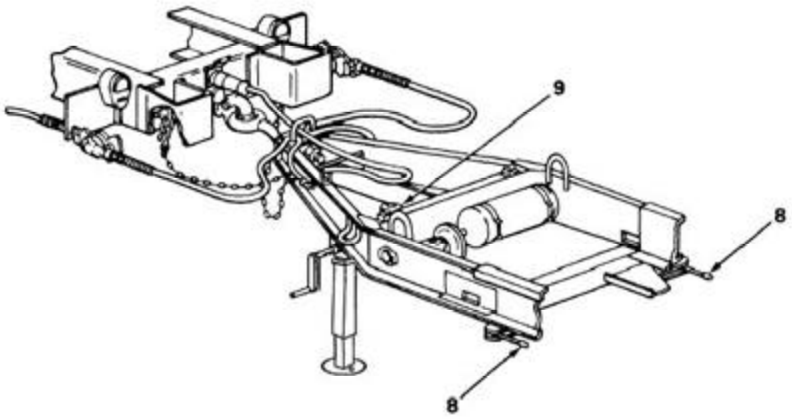

OPERATION

DRIVING

When driving the towing vehicle and trailer, the overall length of the unit must be kept in mind when passing other vehicles and when turning. Backing is also affected because the unit is hinged in the middle.

TURNING

When turning corners, allow for the fact that the trailer wheels turn inside the turning radius of the towing vehicle. Make right turns by driving the towing vehicle about halfway into intersection, and then cutting sharply to the right. This will keep trailer wheels off the curb. Keep the vehicle close enough to the edge of the road to prevent vehicles following from passing on the right.

STOPPING

During normal operation, stepping on the brake pedal will apply both towing vehicle and trailer brakes at the same time. Apply brakes gradually and smoothly.

PARKING

When parking for extended periods, both the towing vehicle and trailer parking brakes should be set. You cannot use the trailer service brakes for long-term parking. The air pressure is gradually and automatically vented if they are left applied. The service brakes will release as the air is vented.

TA223298

OPERATION - CONTINUED

BACKING

Use an assistant to guide you while backing. Adjust rear-view mirrors before backing. When the towing vehicle and trailer are in a straight line, the rear of the trailer will move opposite to the direction the front towing vehicle wheels are turned. When the towing vehicle wheels are turned to the right, the rear of the trailer will move to the left as you back up. When the towing vehicle wheels are turned to the left, the rear of the trailer will move to the right.

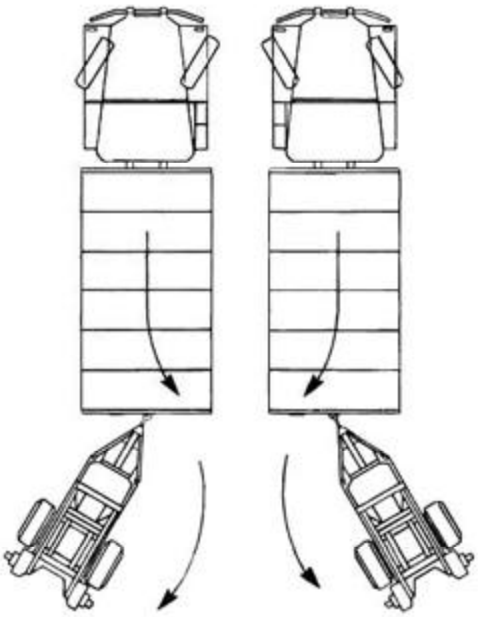

Super Single Style Shown

AFTER USE

1. Remove retaining pin (1) and lockpin (2), allowing back brace (3) to swing down and back.

2. Remove retaining pin (4) and lockpin (5) from landing leg (6) and frame bracket (7) allowing landing leg to swing down and forward.

3. Swing back brace (3) forward and secure it to landing leg (6) with lockpin (2) and retaining pin (1).

4. Rotate crank handle (8) counterclockwise to extend landing leg (6) and remove trailer weight from pintle.

TA223299

AFTER USE - CONTINUED

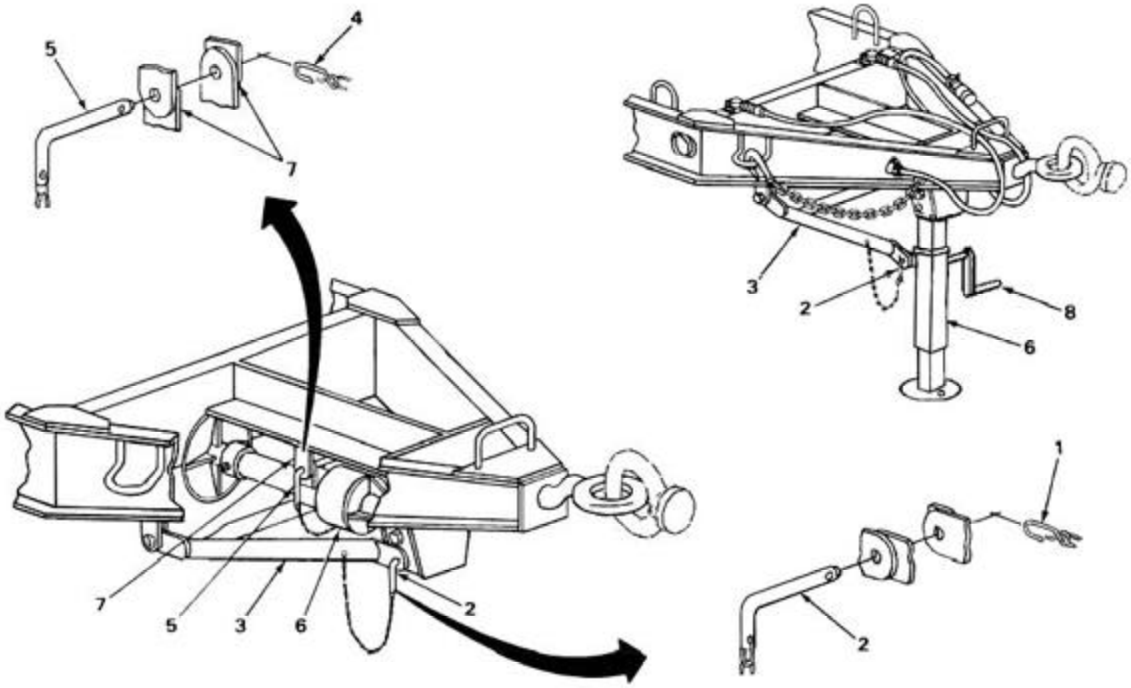

5. Swing step jack (9) inward and remove retaining pins (10) and lockpins (11).

6. Allow step jack (9) to swing down and out.

7. Aline lockpin holes in step jacks (9) and frame (12).

8. Install lockpins (11) and retaining pins (10).

9. Extend lower tubes (13) by stepping on hinged pads (14).

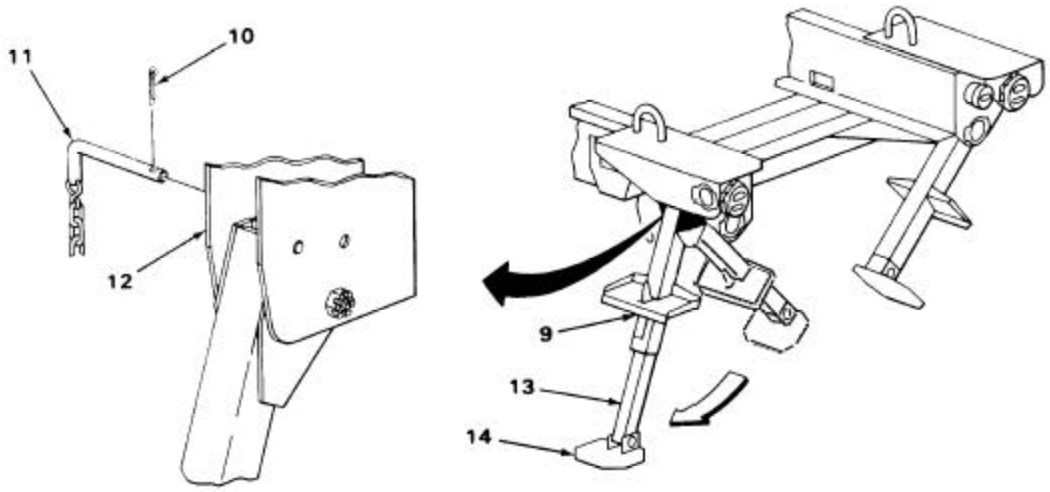

TA223300

AFTER USE - CONTINUED

10. Unhook safety chains (1) from towing vehicle and hook to trailer tiedown loop (2).

11. Close air supply valves on towing vehicle.

12. Uncouple service (4) and emergency (3) air gladhands from towing vehicle and secure to dummy couplings (5) on trailer.

13. Unplug intervehicular cable connector (6) and stow loop (7).

14. Set trailer handbrakes (8) and release air pressure from air reservoir (9).

15. Remove safety pin (10) from pintle (11).

16. Have an assistant drive towing vehicle to uncouple lunette (12) from pintle (11).

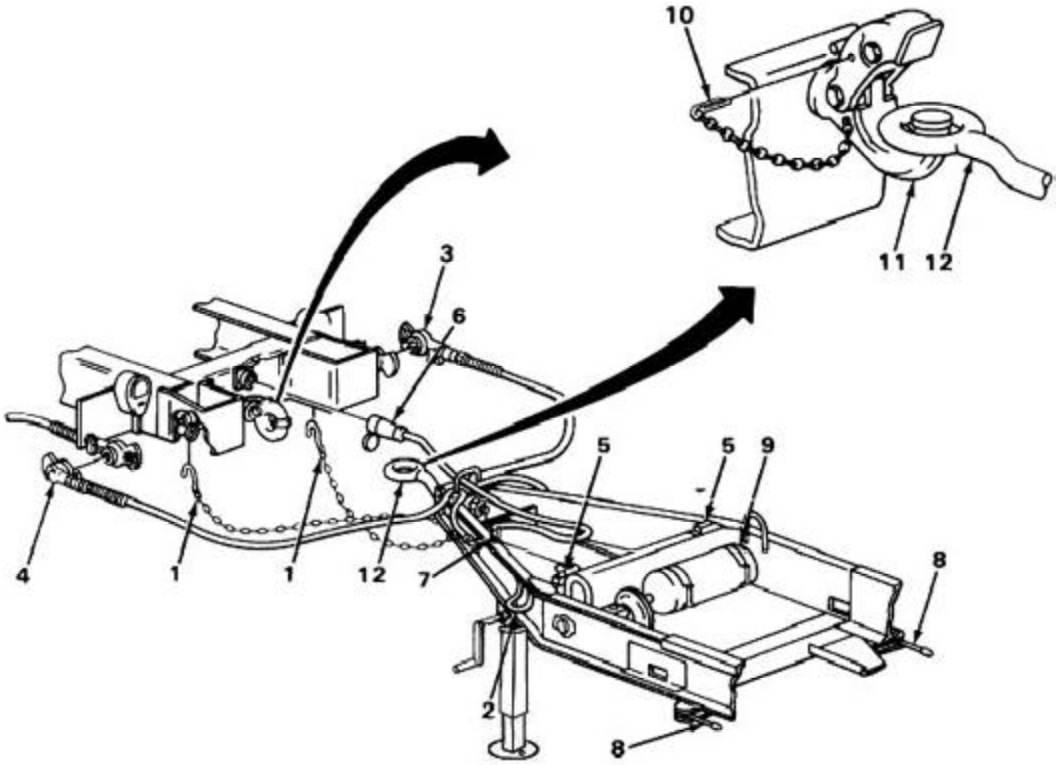

Section IV. OPERATION UNDER UNUSUAL CONDITIONS

	Page
Fording	2-18
Operation in Extreme Cold	2-17
Operation in Extreme Heat	2-17
Operation in Mud	2-17
Operation in Saltwater Areas	2-17
Operation in Sandy or Dusty Areas	2-17
Operation in Snow	2-17

TA223301

OPERATION IN EXTREME COLD

1. Refer to the lubrication chart (page 4-3) for proper lubricants to use in extreme cold.
2. Extreme cold can cause insulation material on electrical wire to crack and cause short circuits, and other construction materials to become hard, brittle, and easily damaged or broken.
3. Tires may freeze to ground or have flat spots if underinflated.
4. Brakeshoes may freeze to brakedrum and will need to be heated to prevent damage to mating surfaces.
5. Refer to FM 9-207 and FM 21-305 for special instructions on driving hazards in extreme cold.
6. When parking short term, park in a sheltered area out of the wind.
7. For parking long term, place footing of planks or brush under trailer wheels, landing gear, and step jack.
8. Remove all built-up ice, snow, and mud as soon as possible after use.
9. Shield the trailer with canvas covers, if available. Keep cover ends off the ground to keep them from freezing to the ground.

OPERATION IN EXTREME HEAT

1. Refer to the lubrication chart for proper lubricants to use in extreme heat.
2. Do not park the trailer in sunlight for long periods of time. Heat and sunlight shorten tire life. Shelter or cover the trailer with canvas if available.

OPERATION IN SANDY OR DUSTY AREAS

Clean, inspect, and lubricate more often in dusty or sandy areas.

OPERATION IN SNOW

See FM 21-305 for special instructions on operating in snow.

OPERATION IN SALTWATER AREAS

Saltwater will cause rapid rust and corrosion to develop. Clean, inspect, and lubricate more often than scheduled.

OPERATION IN MUD

Thoroughly clean and lubricate all parts contaminated by mud as soon as possible after operating in mud. Pack wheel bearings if necessary.

FORDING

1. Check bottom surface of stream or river. If bottom surface is too soft, do not ford.

2. After fording, apply the brakes a few times to help dry out the brake lining. Be sure brakes are operating properly before driving at normal speeds.

3. Lubricate all unpainted surfaces with lubricating oil.

4. Lubricate the trailer in accordance with the lubrication chart on page 4-3.

5. Refer to TM 9-238 for deepwater fording information.

CHAPTER 3

OPERATOR MAINTENANCE

OVERVIEW

This chapter contains the lubrication and troubleshooting maintenance instructions and procedures authorized at operator level.

		Page
Section I.	Lubrication Instructions	3-1
Section II.	Operator Troubleshooting Procedures	3-1
Section III.	Operator Maintenance Procedures	3-3

Section I. LUBRICATION INSTRUCTIONS

Lubrication under usual and unusual conditions and the trailer lubrication chart are contained in organizational maintenance, chapter 4.

Section II. OPERATOR TROUBLESHOOTING PROCEDURES

	Page		Page
Explanation of Columns	3-1	Operator Troubleshooting	3-2
General	3-1	Symptom Index	3-2

GENERAL

This section lists the common malfunctions that you may find during operation of the trailer and its components. Perform the tests, inspections, and corrective actions in the order listed.

This manual cannot list all malfunctions that may occur, nor all tests or inspections and corrective actions. If a malfunction is not listed, or is not corrected by the corrective actions listed, notify your supervisor.

EXPLANATION OF COLUMNS

Malfunction. Visual or operational indication that something is wrong with the trailer.

Test/Inspection. Procedure to isolate problem to a component or system.

Corrective Action. Procedure to correct problem.

SYMPTOM INDEX

This symptom index is provided as a guide to the troubleshooting procedure that will help you solve the problem you're having.

Page

ELECTRICAL SYSTEM

All lamps fail to light 3-2
One or more (but not all) lamps fail to light 3-2

BRAKES

No brakes 3-3

OPERATOR TROUBLESHOOTING

MALFUNCTION
TEST OR INSPECTION
CORRECTIVE ACTION

ELECTRICAL SYSTEM

1. ALL LAMPS FAIL TO LIGHT.

Step 1. Check that intervehicular cable is properly connected.

Reconnect.

Step 2. Check towing vehicle circuit breaker/fuse.

Refer to towing vehicle technical manual for maintenance instructions.

If lamps still do not light, notify organizational maintenance.

2. ONE OR MORE (BUT NOT ALL) LAMPS FAIL TO LIGHT.

Check for loose connector at affected light.

Reconnect.

If lamp still fails to light, notify organizational maintenance.

OPERATOR TROUBLESHOOTING - CONTINUED

MALFUNCTION
TEST OR INSPECTION
CORRECTIVE ACTION

BRAKES

3. NO BRAKES.

Step 1. Check for open draincock on air reservoir.

Close draincock.

Step 2. Check for closed air valves on towing vehicle.

Open air valves.

Step 3. Check air line gladhands for proper connection (emergency-to-emergency and service-to-service).

Reconnect.

If you still have no brakes, notify organizational maintenance.

step 4. Check for hydraulic leaks.

Notify organizational maintenance.

Section III. OPERATOR MAINTENANCE PROCEDURES

	Page		Page
Handbrake	3-4	Wheel and Tire	3-5

NOTE

Personnel are listed only if the task requires more than one technician. If Personnel Required is not listed, one technician can do the task.

HANDBRAKE

This task covers:

Adjustment

INITIAL SETUP

Tools

Jack, hydraulic

LOCATION	ITEM	ACTION **REMARKS**
		NOTE Procedure is for one handbrake. Repeat procedure for opposite side.
1. Axle (1)	Wheels (2)	Using hydraulic jack (3), raise.
2. Chassis	Handbrake lever (4)	Release.
3. Handbrake lever (4)	Adjusting knob (5)	Adjust by turning clockwise to tighten or counterclockwise to loosen. **Wheel and tire should lock when hand-brake lever travels no more than two-thirds.**
4. Chassis	Handbrake lever (4)	Release. **Wheel and tire should turn freely.**
5. Axle	Wheels (2)	Using hydraulic jack, lower. **Remove jack.**

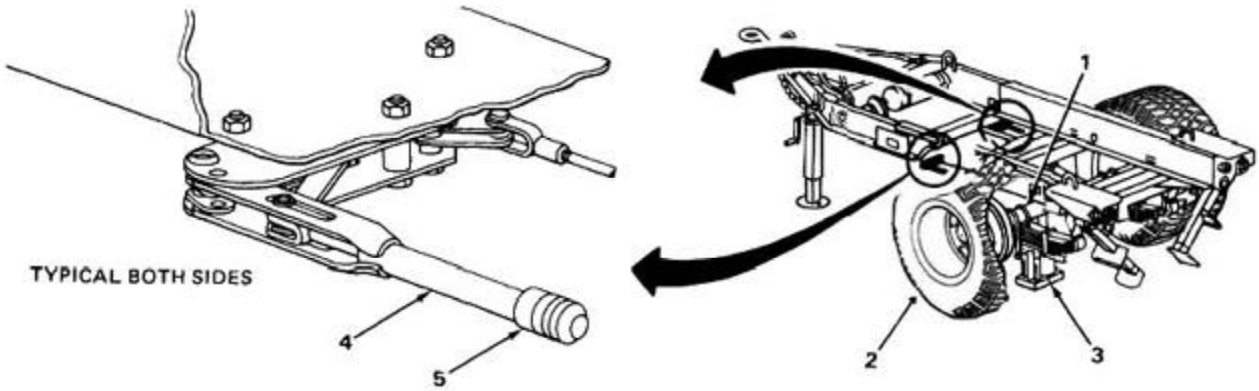

Super Single Style Shown

TASK ENDS HERE

TA223302

WHEEL AND TIRE

This task covers:

a. Removal (page 3-5)
b. Installation (page 3-6)

INITIAL SETUP

Tools

Handle, 3/4-inch square drive
Jack, hydraulic

Tools – Continued

Socket, wheel, 1 1/2-by 7/8- by 3/4-inch square drive

	LOCATION	ITEM	ACTION **REMARKS**

REMOVAL

NOTE

Outer capnuts are marked R on right wheel and L on left wheel. Nuts must be turned in opposite direction to normal forward rotation of wheel to be loosened or removed.

1.	Wheels and tires (1 and 2)	Six outer (3) and six inner (4) capnuts	Using wheel socket, loosen nuts. **Do not remove nuts.**
2.	Axle (5)	Wheels and tires (1 and 2)	Using hydraulic jack (6), raise.
3.	Six inner capnuts (4)	Six outer capnuts (3)	Using wheel socket, remove.
4.		Outer wheel and tire (1)	Remove.

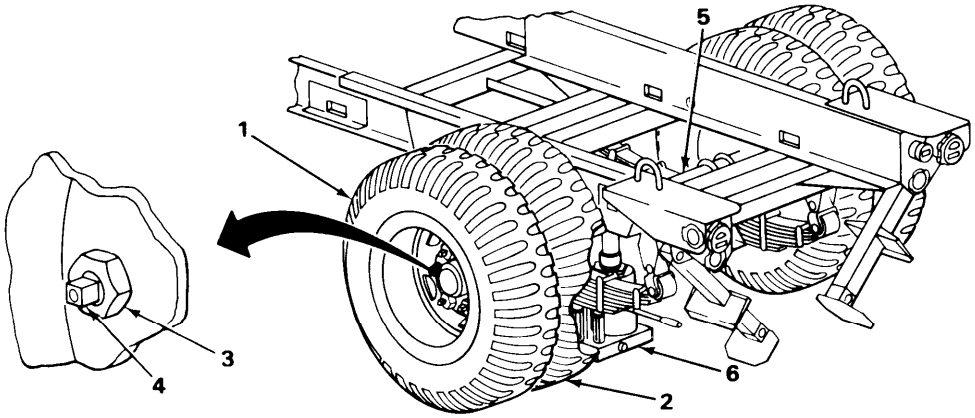

TA223303

WHEEL AND TIRE - CONTINUED

LOCATION	ITEM	ACTION **REMARKS**
REMOVAL – CONTINUED		
5. Inner wheel (1)	Six inner capnuts (2)	Using wheel socket, remove.
6. Hub (3)	Inner wheel (1)	Remove.

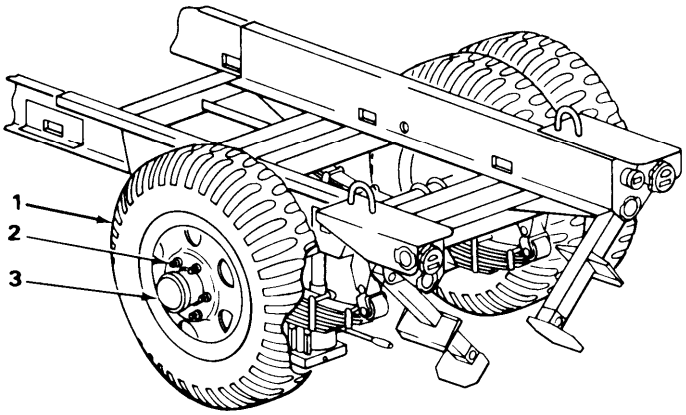

INSTALLATION

7. Inner wheel (1)	Hub (2)	Position wheel on hub studs (3).
8.	Six inner capnuts (4)	Using wheel socket, install. **Tighten using illustrated tightening sequence.**

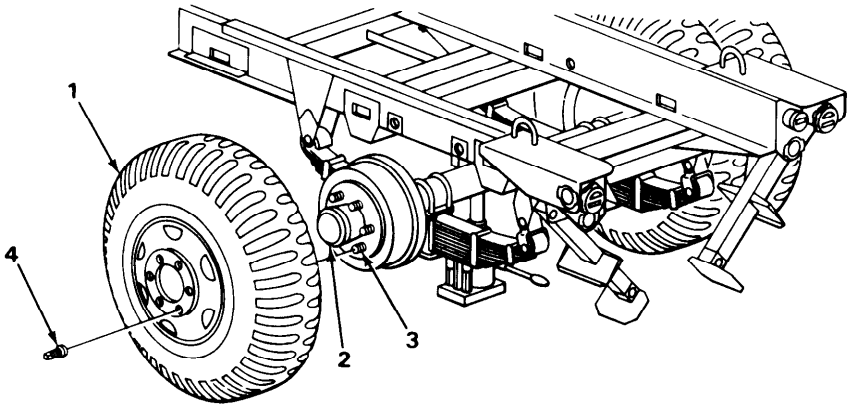

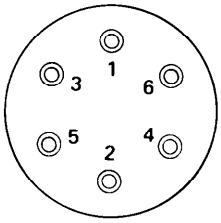

TIGHTENING SEQUENCE

TA223304

WHEEL AND TIRE - CONTINUED

LOCATION	ITEM	ACTION **REMARKS**
9. Six inner capnuts (4)	Outer wheel (5)	Place in position. **Position inner and outer valve stems as far apart as possible.**
10. Six outer capnuts (6)		Using wheel socket, install. **Tighten using illustrated tightening sequence.**
11. Axle (7)	Wheels and tires (1 and 5)	Using hydraulic jack (8), lower. **Remove jack.**
12. Outer wheel (5)	Six inner (4) and six outer capnuts(6)	Using wheel socket and illustrated tightening sequence, retighten.

NOTE

Have organizational maintenance torque capnuts using torque wrench to 450 to 500 ft lb (610 to 678 N•m).

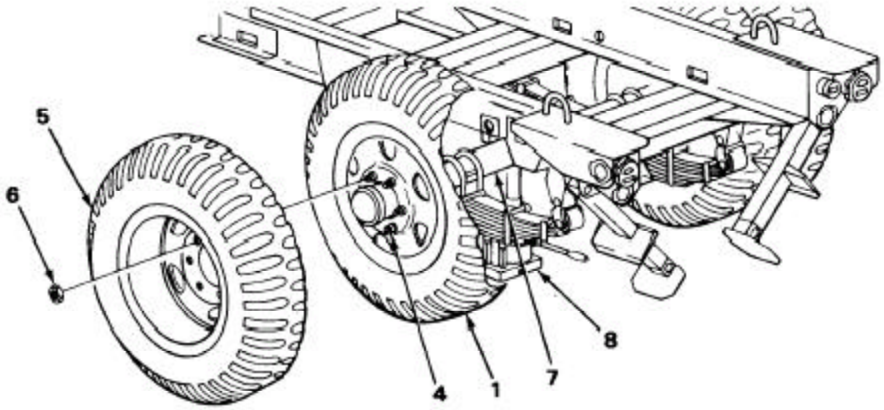

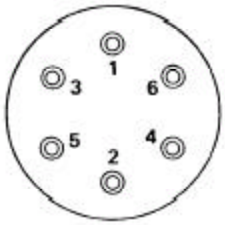

TIGHTENING SEQUENCE

TASK ENDS HERE

TA223305

WHEEL AND TIRE (Super Single Style)

This task covers:

a. Removal (page 3-5)
b. Installation (page 3-6)

INITIAL SETUP

Tools
Handle, 3/4-inch square drive
Jack, hydraulic

Tools – Continued
Socket, wheel, 1 1/2-by 7/8- by 3/4-inch square drive

LOCATION	ITEM	ACTION **REMARKS**
REMOVAL		
1. Wheel and tire (1)	Six capnuts (4)	Using wheel socket, loosen nuts. **Do not remove nuts**.
2. Axle	Wheel and tire (1)	Using hydraulic jack, raise.
3. Hub studs (3)	12 capnuts (4)	Using wheel socket, remove capnuts.
4. Hub (2)	Wheel and tire (1)	Remove.
INSTALLATION		
5. Hub (2)	Wheel and tire (1)	Position wheel on hub studs (3).
6. Hub studs (3)	Six capnuts (4)	Using wheel socket, install. (4) **Tighten using illustrated tightening sequence.**
7. Axle	Wheel and tire (1)	Using hydraulic jack, lower. **Remove jack.**

NOTE

Have organizational maintenance torque capnuts using torque wrench to 450 to 500 ft lb (610 to 678 N•m).

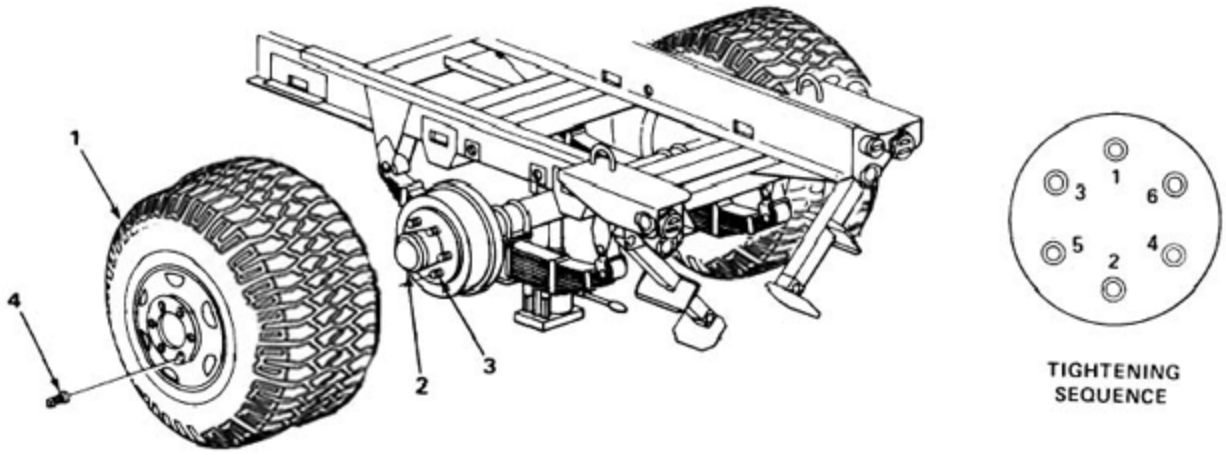

CHAPTER 4

ORGANIZATIONAL MAINTENANCE

OVERVIEW

This chapter contains all the maintenance authorized to be performed by organizational maintenance.

		Page
Section I.	Lubrication Instructions	4-2
Section II.	Repair Parts, Special Tools; Test, Measurement, and Diagnostic Equipment (TMDE); and Support Equipment	4-5
Section III.	Service Upon Receipt	4-5
Section IV.	Organizational Preventive Maintenance Checks and Services	4-7
Section V.	Organizational Troubleshooting Procedures	4-10
Section VI.	General Maintenance Instructions	4-14
Section VII.	Electrical System	4-16
Section VIII.	Axle	4-31
Section IX.	Brake System	4-36
Section X.	Wheel, Tire, Hub, and Drum	4-76
Section XI.	Frame and Towing Attachment	4-82
Section XII.	Spring	4-88
Section XIII.	Body Accessory	4-93
Section XIV.	Preparation for Storage and Shipment	4-96

Section I. LUBRICATION INSTRUCTIONS

	Page		Page
Lubrication Chart	4-3	Lubrication Instructions	4-2

LUBRICATION INSTRUCTIONS

GENERAL

Keep all lubricants in closed containers and store in a clean, dry place away from external heat. Keep container covers clean and allow no dust, dirt, or other foreign material to mix with the lubricants. Keep all lubrication equipment clean and ready for use.

CLEANING

Keep all external parts not requiring lubrication free of lubricants. Before lubricating the equipment, wipe all lubrication points free of dirt and grease. Clean all lubrication points after servicing to prevent accumulation of foreign matter.

LUBRICATION INTERVAL

Service the lubrication points at the proper intervals as specified in the lubrication chart. The intervals specified are based on operation under normal conditions. Modification of the recommended intervals may be required under unusual operating conditions.

LUBRICATION CHART

Refer to the lubrication chart on the following page for lubrication under normal conditions. Refer to FM 9-207 for instructions on lubrication in weather below 0°F (-18°C). Refer to TM 9-238 for instructions on lubrication before and after fording. Clean and inspect all lubrication points after operating in mud, dust, sand, or other unusual conditions. Lubricate the trailer in accordance with the lubrication chart.

LUBRICATION CHART

CHASSIS, TRAILER: GENERATOR 2 1/2 TON, 2-WHEEL, M200A1 (2330-00-331-2307)

Hard-time intervals and related man-hour times are based on normal operation, The man-hour time specified is the time you need to do all services prescribed for a particular interval. Change the interval if your lubricants are contaminated or if you are operating equipment under adverse conditions, including longer-than-usual operating hours. The interval may be extended during periods of low activity. If extended, adequate preservation precautions must be taken.

Dotted leader lines indicate lubrication is required on both sides of the equipment.

WARNING

Drycleaning solvent PD-680 is both toxic and flammable. Avoid prolonged breathing of vapors and avoid skin contact, Do not use near open flame or excessive hoot. Flash point of solvent is 138° F (59° C). Serious illness, injury, or loss of life could result from improper use.

Clean all fittings and area around lubricating points with drycleaning solvent PD-680 or equivalent before lubricating.

LUBRICANT • INTERVAL

Step jack (See Note 3.) — GAA

Spring shackle bolts (two fittings) — GAA

Wheel bearing (See Note 4.) — GAA

Landing leg gearbox (See Note 5.) — GAA

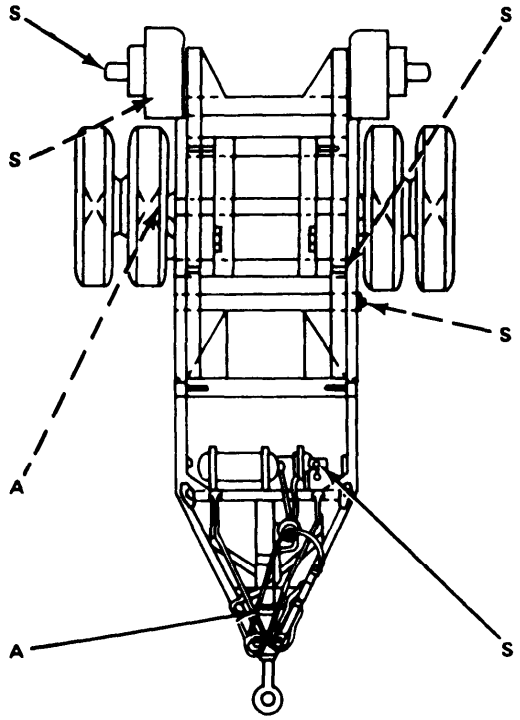

INTERVAL • LUBRICANT

S — GAA — Spring shackles

S — GAA — Emergency brake cable

S — BFS — Hydraulic brake master cylinder

TOTAL MAN-HOURS*

INTERVAL	MAN-HOURS
A	1.5
S	0.7

* The time specified is the time required to perform all services at the particular interval.

TA223306

-KEY–

LUBRICANTS	EXPECTED TEMPERATURES				INTERVALS
	ABOVE +15° F (ABOVE -9°C)	+40° F TO -15° F (+4° C TO -26° C)	+40° F TO -65° F (+4° F TO -54° C)		
OE/HDO Lubricating oil, internal combustion engine, tactical service	OE/HDO-30	OE/HDO-10			A – Annually S – Semiannually
OEA Lubricating oil, internal combustion, arctic Oilcan points (See Note 2.)			OEA (See Note 1.)		
BFS Brake fluid silicone, automotive Master cylinder	All Temperatures				
GAA Grease, automotive and artillery	All Temperatures				

NOTES:

1. For operation of equipment in protracted cold temperatures below -15° F (-26° C), remove lubricants prescribed in the key for temperatures above -15° F (-26° C). Relubricate with lubricants specified in the key for temperatures below -15° F (-26° C). If OEA lubricant is required to meet the temperature changes prescribed in the key, OEA lubricant is to be used in place of OE/HDO-10 lubricant for all temperature ranges where OE/HDO-10 lubricant is specified in the key.

2. Oilcan Points. Every 6 months, lubricate linkage, pins, clevises, and all exposed adjusting threads with OE/HDO.

3. Step Jack: Every 6 months, extend inner leg fully and coat lightly with GAA.

4. Wheel Bearings: Every 12 months, remove, clean, and repack with GAA. Refer to TM 9-214, Inspection, Care, and Maintenance of Antifriction Bearings.

5. Landing Leg Gearbox Lubricate at time of disassembly.

6, Lubricants: The following is a list of lubricants with military symbols and applicable specification numbers:

OE/HDO – MIL-L-2104C OEA – MIL-L-46167
GAA – MIL-G-10924C BFS – MIL-B-46176

TA223307

Section II. REPAIR PARTS, SPECIAL TOOLS; TEST, MEASUREMENT, AND DIAGNOSTIC EQUIPMENT (TMDE); AND SUPPORT EQUIPMENT

	Page		Page
Common Tools and Equipment	4-5	Special Tools, TMDE, and Support Equipment	4-5
Repair Parts	4-5		

COMMON TOOLS AND EQUIPMENT

Refer to the Modified Table of Organization and Equipment (MTOE) for authorized common tools and equipment applicable to your unit.

SPECIAL TOOLS, TMDE, AND SUPPORT EQUIPMENT

No special tools, TM DE, or support equipment are required to maintain the trailer.

REPAIR PARTS

Repair parts are listed and illustrated in appendix F of this manual.

Section III. SERVICE UPON RECEIPT

	Page		Page
Preliminary Servicing and Adjustment of Equipment	4-6	Service Upon Receipt of Materiel	4-5

SERVICE UPON RECEIPT OF MATERIEL

This task covers:

a. Unpacking (page 4-6)
b. Checking unpacked equipment (page 4-6)

INITIAL SETUP

Tools

Cutter, strap
Puller, nail

Materials/Parts

Drycleaning solvent PD-680 (item 10, appendix E)
Rags (item 7, appendix E)

SERVICE UPON RECEIPT OF MATERIEL - CONTINUED

LOCATION	ITEM	ACTION **REMARKS**
UNPACKING		
1. Trailer	DD Form 1397	Read and follow all instructions.
2.	Metal straps, plywood, tape, seals, and wrappings	Using strap cutter and nail puller, remove all straps, plywood, tape, seals, and wrappings.
CHECKING UNPACKED EQUIPMENT		

WARNING

Drycleaning solvent PD-680 is both toxic and flammable. Avoid prolonged breathing of vapors and avoid skin contact. Do not use near open flame or excessive heat. Flash point of solvent is 138°F (59°C). Serious illness, injury, or loss of life could result from improper use.

3. Trailer	Coated exterior parts	Using drycleaning solvent and rags, remove rust preventive compound.
4.	Trailer	a. Inspect for any damage during shipment. b. Check for modification of equipment.
5.	Equipment packing list	Check equipment against packing list for completeness. Discrepancies must be reported in accordance with instructions in TM 38-750.

TASK ENDS HERE

PRELIMINARY SERVICING AND ADJUSTMENT OF EQUIPMENT

Perform the operator and organizational preventive maintenance checks and services (PMCS) as described on pages 2-6 and 4-7.

Lubricate all lubrication points as shown in the Lubrication Chart (page 4-3), regardless of interval.

PRELIMINARY SERVICING AND ADJUSTMENT OF EQUIPMENT - CONTINUED

Schedule the next preventive maintenance checks and services on DD Form 314, Preventive Maintenance Schedule and Record.

Report all problems on DD Form 2407, Maintenance Request, if the deficiencies appear to involve unsatisfactory design.

Perform a break-in road test of 25 miles (40.2 kilometers) at a maximum speed of 55 miles per hour (88.5 kilometers per hour)

Section IV. ORGANIZATIONAL PREVENTIVE MAINTENANCE CHECKS AND SERVICES (PMCS)

	Page
General	4-7
Organizational Preventive Maintenance Checks and Services	4-9
PMCS Column Description	4-8
Special Instructions	4-7

GENERAL

The trailer must be inspected systematically to ensure that it is ready for operation at all times. Inspection will allow defects to be discovered and corrected before they result in serious damage or failure. This section contains a tabulated list of preventive maintenance checks and services to be performed by organizational maintenance personnel. All deficiencies and corrective actions will be recorded on DA Form 2404.

SPECIAL INSTRUCTIONS

Do your (S) PMCS once every 6 months.

Do your (A) PMCS once every year.

If something doesn't work, troubleshoot it with the instructions in this manual or notify your supervisor.

Always do your preventive maintenance in the same order, so it gets to be a habit. Once you've had practice, you will spot anything wrong in a hurry.

If anything looks wrong and you can't fix it, write it down on your DA Form 2404. If you find something seriously wrong, report it to direct support as soon as possible and notify your supervisor.

SPECIAL INSTRUCTIONS - CONTINUED

WARNING

Drycleaning solvent PD-680 is both toxic and flammable. Avoid prolonged breathing of vapors and avoid skin contact. Do not use near open flame or excessive heat. Flash point of solvent is 138°F (59°C). Serious illness, injury, or loss of life could result from improper use.

NOTE

When you are doing any PMCS or routine checks, keep in mind the warnings and cautions.

Routine checks, like those listed below, are not listed in the PMCS checks. They are things that you should do any time you see they must be done. If you find a routine check in your PMCS, it is because other operators reported problems with this item.

Keep it Clean. Dirt, grease, oil, and debris only get in the way and may cover up a serious problem. Clean as you work and as needed. Use drycleaning solvent PD-680 to clean metal surfaces. Use soap and water when cleaning rubber or plastic material.

Bolts, Nuts, and Screws. Check that they are not loose, missing, bent, or broken. You can't try them all with a tool but look for chipped paint, bare metal, or rust around boltheads. Tighten any that you find loose.

Welds. Look for loose or chipped paint, rust, or gaps where parts are welded together. If you find a bad weld, report it to direct support.

Electric Wires and Connectors. Look for cracked or broken insulation, bare wires, and loose or broken connectors. Tighten loose connections and make sure wires are in good condition.

Hoses and Lines. Look for wear, damage, and leaks. Make sure clamps and fittings are tight. If a leak comes from a loose fitting or connector, tighten it. If something is broken or worn out, either correct it or report it to direct support (refer to MAC).

PMCS COLUMN DESCRIPTION

Item No. – The order that PMCS should be performed, and also used as a source of item numbers for the TM number column on DA Form 2404, Equipment Inspection and Maintenance Worksheet, when recording results.

Interval – Tells when each task is to be performed.

Item to be Inspected – Lists the checks to be performed.

ORGANIZATIONAL PREVENTIVE MAINTENANCE CHECKS AND SERVICES

S-SEMIANNUALLY A-ANNUALLY

ITEM NO.	INTERVAL S	INTERVAL A	ITEM TO BE INSPECTED PROCEDURE: CHECK FOR AND HAVE REPAIRED, FILLED, REPLACED, OR ADJUSTED AS NEEDED
			NOTE Perform operator/crew PMCS prior to or in conjunction with organizational PMCS.
1.	●		FRAME Look for cracks, bent members, or broken welds.
2.	●		BRAKE MASTER CYLINDER Check fluid level and fill to 1/2 inch from top.
3.		●	WHEEL BEARINGS AND BRAKE ASSEMBLIES a. Remove wheel hubs and brakedrums (page 4-76). b. Clean, inspect, repack, or replace bearings. c. Clean, inspect, and replace brake parts as required (page 4-43). d. Adjust brakes (page 4-46).
4.	●		WHEELS AND TIRES a. Check serviceability of tires as indicated in TM 9-2610-200-24, Organizational Care, Maintenance, and Repair of Pneumatic Tires, Inner Tubes, and Radial Tires. b. Tighten wheel nuts to 450 – 500 ft lb (611 – 678 N•m).
5.	●		SUSPENSION Check for bent or cracked parts, loose mountings, and worn bushings.

Section V. ORGANIZATIONAL TROUBLESHOOTING PROCEDURES

	Page		Page
Explanation of Columns	4-10	Organizational Troubleshooting	4-11
General	4-10	Symptom Index	4-10

GENERAL

The table in this section lists the common malfunctions that may be found during the operation or maintenance of the trailer or components. Do the tests or inspections and corrective actions in the order listed.

This manual cannot list all malfunctions that may occur, nor all tests or inspections and corrective actions. If a malfunction is not listed, or is not corrected by the corrective action column, notify your supervisor.

Trailer must be hooked to towing vehicle when performing electrical or brake tests.

EXPLANATION OF COLUMNS

Malfunction. Visual or operational indication that something is wrong with your trailer.

Test/Inspection. Procedure used to isolate the problem to a system or a component.

Corrective Action. Procedure used to correct the problem.

SYMPTOM INDEX

This symptom index is provided as a quick way to get you to the troubleshooting procedure that will help you solve the problem that you are having.

	Page
BRAKE SYSTEM	
Brakes will not release	4-12
Weak or no brakes	4-13
ELECTRICAL SYSTEM	
Lamps dim or flickering	4-11
One or more lamps fail to light	4-11

NOTE

Refer to the electrical schematic on page 1-8 when performing any electrical troubleshooting.

ORGANIZATIONAL TROUBLESHOOTING

MALFUNCTION
TEST OR INSPECTION
CORRECTIVE ACTION

ELECTRICAL SYSTEM

1. ONE OR MORE LAMPS FAIL TO LIGHT.

Step 1. Check lamps.

Remove and replace as required:
Blackout light (page 4-17).
Composite light (page 4-20).
Service taillight (page 4-19).

Step 2. Check for continuity between edge of lamp socket and light assembly housing and center post of lamp socket and related light assembly plug connector.

If no continuity exists, replace light assembly:
Blackout light (page 4-17).
Composite light (page 4-20).
Service taillight (page 4-19).

Step 3. Check continuity between edge of lamp socket and trailer frame.

If no continuity exists, clean mating surfaces.

Step 4. Disconnect main harness from intervehicular cable. Have assistant operate lights while you check voltage in affected lines of intervehicular cable.

If 24 volts are present in all affected lines, replace main harness (page 4-25).

Step 5. Disconnect intervehicular cable from towing vehicle receptacle. Have assistant operate lights while you check voltage at receptacle.

If 24 volts are present at receptacle, replace cable.

If 24 volts are not present at receptacle, check TM for towing vehicle.

2. LAMPS DIM OR FLICKERING.

Step 1. Check continuity between intervehicular cable pin D and ground wire eyelet end.

If no continuity exists, replace cable.

ORGANIZATIONAL TROUBLESHOOTING - CONTINUED

MALFUNCTION
TEST OR INSPECTION
CORRECTIVE ACTION

2. LAMPS DIM OR FLICKERING - CONTINUED.

Step 2. Check continuity between ground wire eyelet end and trailer frame.

If no continuity exists, remove eyelet and clean mating surfaces.

Step 3. Check continuity between edge of lamp socket and light assembly housing.

If no continuity exists, replace light assembly:
Blackout light (page 4-17).
Composite light (page 4-20).
Service taillight (page 4-19).

Step 4. Check continuity between edge of lamp socket and trailer frame.

If no continuity exists, clean mating surfaces.

BRAKE SYSTEM

3. BRAKES WILL NOT RELEASE.

NOTE

If only one wheel's brake will not release, proceed to step 4.

Step 1. Check relay valve for proper operation. Refer to page 2-12, step 27.

WARNING

Before performing any maintenance tasks on brake system, disconnect trailer air lines from towing vehicle and open draincock to release all air pressure from system. Serious injury may result from failure to do so.

Replace relay valve as required (page 4-57).

Step 2. Check airbrake chamber for insufficient push rod travel.

Adjust service brakes as required (page 4-46).

WARNING

All parts of the service brake assembly will be coated with asbestos dust from the brake linings. A filter mask should be worn whenever working on any assembly components. Breathing asbestos dust may cause serious damage to health.

ORGANIZATIONAL TROUBLESHOOTING - CONTINUED

MALFUNCTION
TEST OR INSPECTION
CORRECTIVE ACTION

Step 3. Check service airhose and lines for obstructions.

Remove airhose and lines to clear obstructions (page 4-72).

Replace airhose and lines as required (page 4-72).

Step 4. Check for binding handbrake cable.

Replace cable as required (page 4-38).

Step 5. Check for separation of brake lining from brakeshoe.

Replace as required (page 4-41).

4. WEAK OR NO BRAKES.

Step 1. Check fluid level in master cylinder.

Replenish fluid as required (page 4-9).

Bleed brakes (page 4-55).

Step 2. Check relay valve for proper operation.

WARNING

Before performing any maintenance tasks on brake system, disconnect trailer air lines from towing vehicle and open draincock to release all air pressure from system. Serious injury may result from failure to do so.

Replace relay valve as required (page 4-57).

Step 3. Check airbrake chamber for excessive push rod travel.

Adjust service brakes as required (page 4-46).

Step 4. Check for worn brake linings.

Replace as required (page 4-41).

Step 5. Inspect wheel cylinders for binding or leaking.

Replace as required (page 4-48).

Section VI. GENERAL MAINTENANCE INSTRUCTIONS

	Page		Page
Cleaning Instructions	4-14	Inspection Instructions	4-15
General	4-14		

GENERAL

Each maintenance section provides instructions for organizational maintenance personnel. The following initial setup information applies to all procedures.

Resources required are not listed unless they apply to the procedure.

Personnel are listed only if the task requires more than one technician. If Personnel Required is not listed, one technician can do the task.

The normal standard equipment condition to start a maintenance task is power off. Equipment condition is not listed unless some other condition is required.

WARNING

Improper cleaning methods and use of unauthorized cleaning liquids or solvent can injure personnel and damage equipment. Refer to TM 9-247.

CLEANING INSTRUCTIONS

The cleaning instructions will be the same for the majority of parts and components that make up the trailer.

The importance of cleaning must be thoroughly understood by maintenance personnel. Care and effort are required in cleaning. Dirt and foreign material are a constant threat to satisfactory maintenance. The following should apply to all cleaning, inspection, repair, and assembly operations.

1. Clean all parts before inspection, after repair, and before assembly.

2. Keep hands free of grease, which can collect dust, dirt, or grit.

3. After cleaning, cover or wrap all parts to protect them from dust and dirt. Lightly oil parts that are subject to rust.

STEAM CLEANING

Protect all electrical equipment that can be damaged by the steam or moisture before steam cleaning the exterior of the trailer.

Place disassembled parts in a suitable container to steam clean.

Dry and cover (or lightly oil) all parts subject to rust after cleaning.

CLEANING INSTRUCTIONS - CONTINUED

CASTINGS, FORGINGS, AND MACHINED METAL PARTS

WARNING

Drycleaning solvent PD-680 is both toxic and flammable. Avoid prolonged breathing of vapors and avoid skin contact. Do not use near open flame or excessive heat. Flash point of solvent is 138°F (59°C). Serious illness, injury, or loss of life could result from improper use.

Clean inner and outer surfaces with drycleaning solvent.

Remove grease and accumulated deposits with a stiff bristle brush.

Check machined surfaces for scoring or obvious damage.

WARNING

Particles blown by compressed air are hazardous. Make certain the airstream is directed away from user and other personnel in the area. User must wear safety eye goggles or face shield to prevent injury when using compressed air. Make certain that airstream is less than 30 psig.

Blow out all threaded holes with compressed air to remove dirt and cleaning fluids.

ELECTRICAL CABLES, FLEXIBLE HOSE, AND OIL SEALS

CAUTION

Washing oil seals, electrical cables, and flexible hoses with drycleaning solvents or mineral spirits will cause serious damage or destroy the material.

Wash electrical cables and flexible hose with water and soap solution, and wipe dry. Oil seals are generally damaged during removal, so cleaning will not be necessary because new seals will be used on assembly.

BEARINGS

Refer to TM 9-214 for instructions and procedures covering care and maintenance of antifriction bearings.

INSPECTION INSTRUCTIONS

All components and parts must be checked carefully to determine if they are serviceable for reuse, can be repaired, or must be scrapped.

DRILLED AND THREADED HOLES AND SURFACES

Inspect for wear, distortion, cracks, or any other damage in or around holes and surfaces.

Inspect threaded areas for wear, distortion, or evidence of cross threading.

Mark all damaged areas for repair or replacement.

INSPECTION INSTRUCTIONS - CONTINUED

METAL LINES, FLEXIBLE LINES (HOSES), AND METAL FITTINGS

Inspect metal lines for sharp kinks, cracks, bad bends, or if badly dented.

Inspect flexible lines for fraying, evidence of leakage, or loose metal fittings or connectors.

GEARS

Inspect gear teeth for wear, chips, or breakage.

Inspect gear shafts for wear or grooving.

BUSHINGS

Inspect bushings for excessive wear, elongation, or grooving.

Section VII. ELECTRICAL SYSTEM

	Page		Page
Blackout Stoplight	4-17	InterVehicular Cable	4-23
Blackout Stoplight Lamp and Lens	4-16	Main Harness	4-25
Composite Light	4-22	Service Taillight	4-19
Composite Light Lamp and Lens	4-20	Service Taillight Lamp and Lens	4-18
General	4-16	Wiring Harness Repair	4-27

GENERAL

This section provides instructions for organizational maintenance of the electrical system. Good contacts are essential to good operation of the electrical system. When replacing a light assembly make certain that there is no paint on the mating surfaces. If, after performing a maintenance task, the electrical system does not operate properly, troubleshoot in accordance with the instructions in the troubleshooting section.

BLACKOUT STOPLIGHT LAMP AND LENS

This task covers:

a. Removal (page 4-17)
b. Installation (page 4-17)

INITIAL SETUP

Tools	Materials/Parts
Screwdriver, flat-tip	Lamp Lens

BLACKOUT STOPLIGHT LAMP AND LENS - CONTINUED

LOCATION	ITEM	ACTION **REMARKS**
REMOVAL		
1. Body (1)	Two screws (2), lens (3), and gasket (4)	Using screwdriver, remove. **Retain gasket (4).**
2. Socket (5)	Lamp (6)	Push into socket, turn counterclockwise, and remove.
INSTALLATION		
3. Socket (5)	Lamp (6)	Push into socket and turn clockwise.
4. Body (1)	Gasket (4), lens (3), and two screws (2)	Using screwdriver, install.

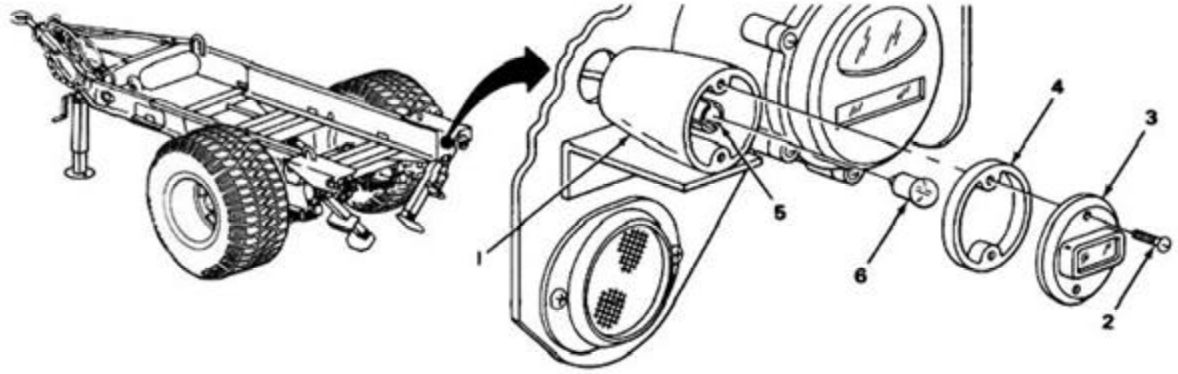

TASK ENDS HERE **Super Single Style Shown**

BLACKOUT STOPLIGHT

This task covers:
a. Removal (page 4-18)
b. Installation (page 4-18)

INITIAL SETUP

Tools
Handle, reversible, 3/8-inch square drive

Tools Continued
Socket, 1/2- by 3/8-inch square drive

BLACKOUT STOPLIGHT - CONTINUED

LOCATION	ITEM	ACTION **REMARKS**
REMOVAL		
1. Blackout stoplight (1)	Electrical connectors (2 and 3)	Pull connector (2) from main harness connector (3).
2. Bracket (4)	Capscrew (5) and lockwasher (6)	Using 1/2-inch socket, unscrew and remove blackout stoplight (1).
INSTALLATION		
3. Bracket (4)	Capscrew (5) and lockwasher (6)	Using 1/2-inch socket, attach blackout stoplight (1).
4. Blackout stoplight (1)	Electrical connectors (2 and 3)	Push connector (3) firmly into connector (2).

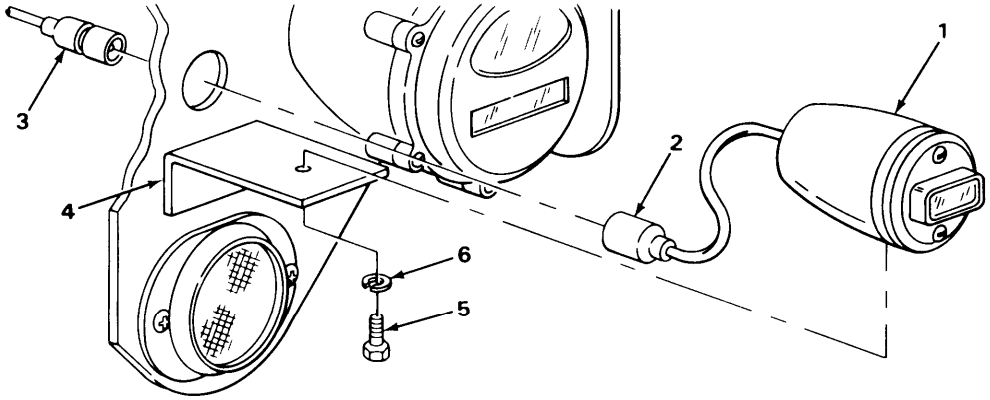

TASK ENDS HERE

SERVICE TAILLIGHT LAMP AND LENS

This task covers:

a. Removal (page 4-19)
b. Installation (page 4-19)

INITIAL SETUP

Tools

Screwdriver, flat-tip

Materials/Parts

Lamp
Lens

TA223309

SERVICE TAILLIGHT LAMP AND LENS - CONTINUED

LOCATION	ITEM	ACTION **REMARKS**
REMOVAL		
1. Body (1)	Six captive screws (2), lens (3), and gasket (4)	Using screwdriver, unscrew and remove lens (3). **Retain gasket (4).**
2. Three sockets (5)	Three lamps (6)	Push in, turn counterclockwise, and remove.
INSTALLATION		
3. Three sockets (5)	Three lamps (6)	Push in and turn clockwise.
4. Body (1)	Gasket (4), lens (3), and six captive screws (2)	Using screwdriver. install.

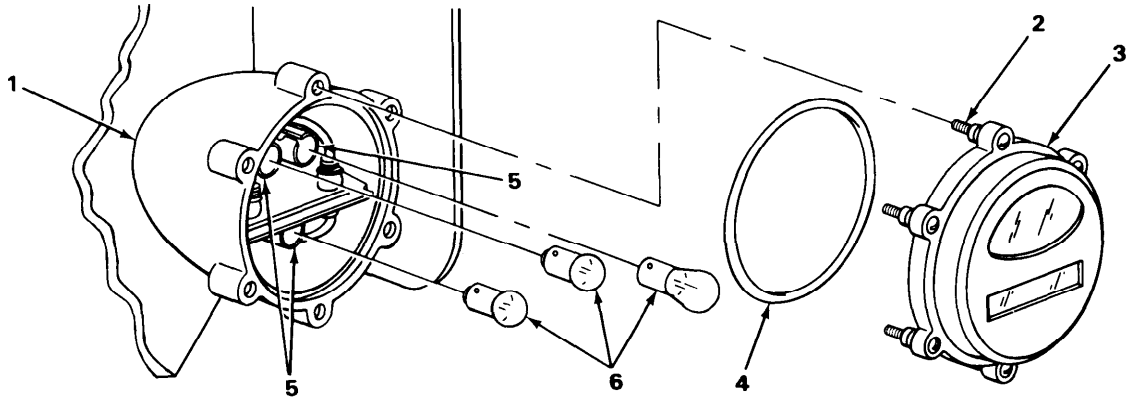

TASK ENDS HERE

SERVICE TAILLIGHT

This task covers:

a. Removal (page 4-20)
b. Installation (page 4-20)

INITIAL SETUP

Tools

Handle, reversible, 3/8-inch square drive

Tools – Continued

Socket, 9/16- by 3/8-inch square drive

TA223310

SERVICE TAILLIGHT - CONTINUED

LOCATION	ITEM	ACTION **REMARKS**
REMOVAL		
1. Service taillight (1)	Three electrical connectors (2 and 3)	Pull connectors (2) from main harness connectors (3).
2.	Two capscrews (4) and two lock-washers (5)	Using 9/16-inch socket, unscrew and remove taillight (1).
INSTALLATION		
3. Service taillight (1)	Two capscrews (4) and two lockwashers (5)	Using 9/16-inch socket, attach tail-light (1).
4.	Three electrical connectors (2 and 3)	Push connectors (3) firmly into connectors (2).

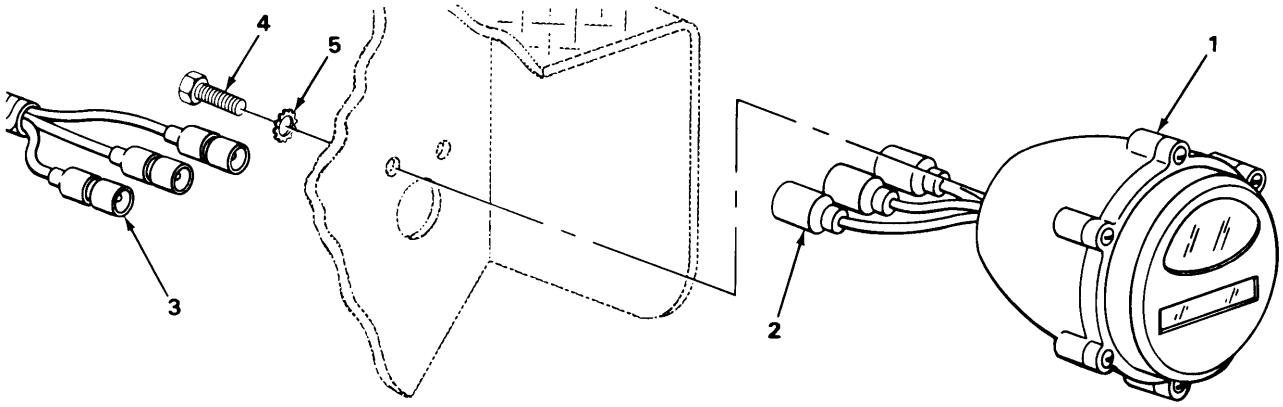

TASK ENDS HERE

COMPOSITE LIGHT LAMP AND LENS

This task covers:

a. Removal (page 4-21)
b. Installation (page 4-21)

TA223311

COMPOSITE LIGHT LAMP AND LENS - CONTINUED

INITIAL SETUP

Tools	Materials/Parts
Screwdriver, flat	Lamp Lens

	LOCATION	ITEM	ACTION **REMARKS**
REMOVAL			
1.	Body (1)	Six captive screws (2), lens (3), and packing (4)	Using screwdriver, unscrew and remove lens (3). **Retain gasket (4).**
2.	Four sockets (5)	Four lamps (6)	Push into socket (5), turn counterclockwise, and remove.
INSTALLATION			
3.	Four sockets (5)	Four lamps (6)	Push into socket (5) and turn clockwise.
4.	Body (1)	Packing (4), lens (3), and six captive screws (2)	Using screwdriver, install.

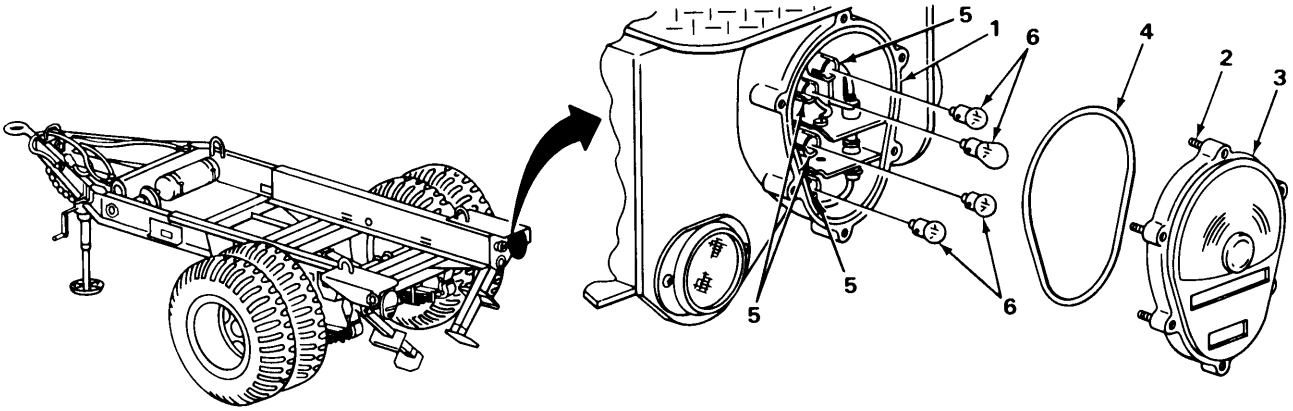

TASK ENDS HERE

TA223312

COMPOSITE LIGHT

This task covers:

a. Removal (page 4-22)
b. Installation (page 4-22)

INITIAL SETUP

Tools

Handle, reversible, 3/8-inch square drive

Tools – Continued

Socket, 9/16- by 3/8-inch square drive

	LOCATION	ITEM	ACTION **REMARKS**
REMOVAL			
1.	Wiring (1)	Four electrical connectors (2 and 3)	Pull four connectors (2) from main harness connectors (3).
2.	Trailer chassis (4)	Two capscrews (5) and lockwashers (6)	Using 9/16-inch socket, unscrew and remove composite light (7).
INSTALLATION			
3.	Trailer chassis (4)	Two capscrews (5) and lockwashers (6)	Using 9/16-inch socket, attach composite light (7).
4.	Wiring (1)	Three electrical connectors (2 and 3)	Push connectors (2) firmly into connectors (3).

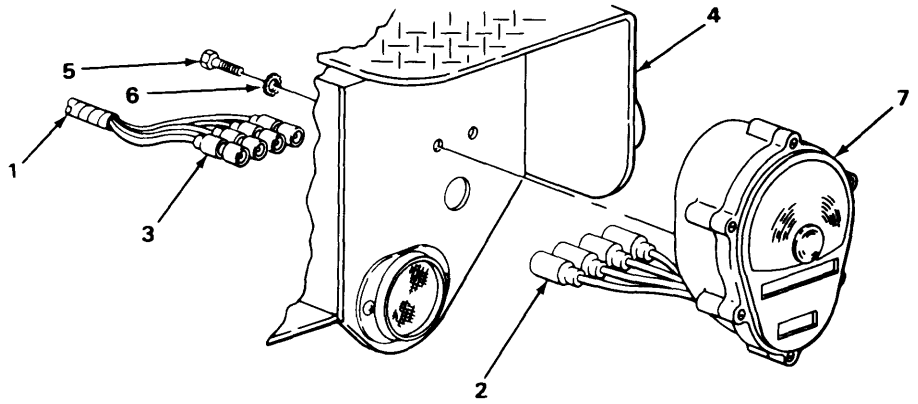

TASK ENDS HERE

TA223313

INTERVEHICULAR CABLE

This task covers:

a. Removal (page 4-23)
b. Installation (page 4-24)

INITIAL SETUP

Tools

Extension, 6-inch, 1/4-inch square drive
Handle, reversible, 1/4-inch square drive

Tools – Continued

Screwdriver, flat-tip
Socket, 11/32- by 1/4-inch square drive
Socket, 7/16- by 1/4-inch square drive

	LOCATION	ITEM	ACTION **REMARKS**
REMOVAL			
	NOTE		
	Be sure the intervehicular cable to main harness cable connectors metal identification bands are installed before removing the intervehicular cable. If they are not, identify matching connectors using tags or tape.		
1.	Clamp (1) to spring (2)	Nut (3), lockwasher (4), and screw (5)	Using 11/32-inch socket and screwdriver, remove.
2.	Clamp (6), ground lead (7), and frame (8)	Nut (9), lockwasher (10), and screw (11)	Using 7/16-inch socket and screwdriver, remove.

TA223314

INTERVEHICULAR CABLE - CONTINUED

LOCATION	ITEM	ACTION **REMARKS**
REMOVAL-CONTINUED		
3. Clip assemblies (1)	Three mated connectors (2 and 3)	Remove and separate.
INSTALLATION		
4. Clip assemblies (1)	Three mated connectors (2 and 3)	a. Match connector (2) identification to connector (3) and push connectors firmly together. b. Push mated connectors into clips (l).
5. Clamp (4)	Nut (5), Lockwasher (6), screw (7), and ground lead (8)	Using 7/16-inch socket and screwdriver,position ground lead (8) attach to chassis.
6. Intervehicular cable (9)	Clamp (10)	Place on intervehicular cable (9) and position on chassis.
7. Clamp (10)	Retaining spring (11), nut (12), screw (13), and lockwasher (14)	Using 11/32-inch socket and screwdriver, position retaining spring (11) on clamp (10) and attach to chassis.

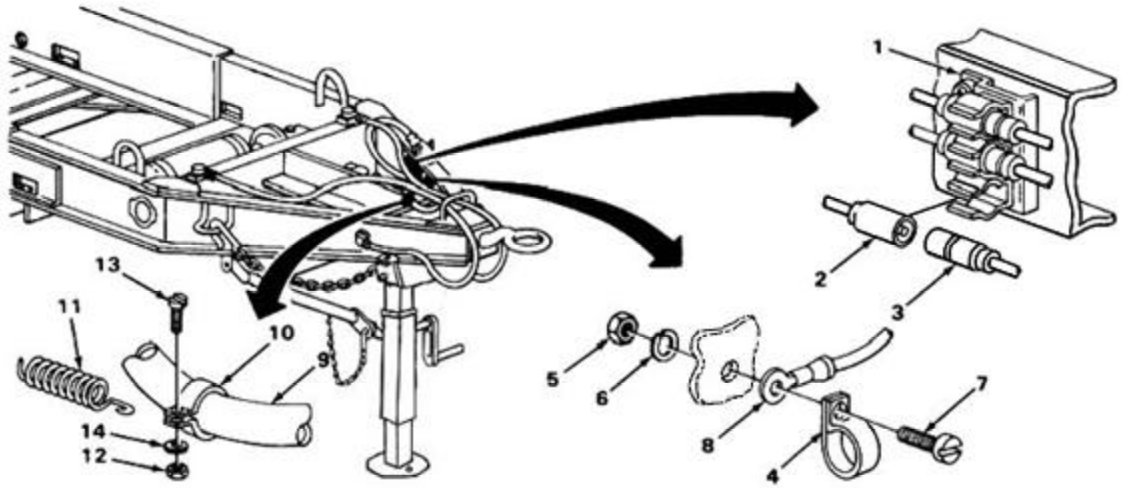

TASK ENDS HERE

TA223315

MAIN HARNESS

This task covers:

a. Removal (page 4-25)
b. Installation (page 4-26)

INITIAL SETUP

Tools	Materials/Parts
Extension, 6-inch, 1/4-inch square drive	Grommets
Handle, reversible, 1/4-inch square drive	
Screwdriver, flat-tip	
Socket, 7/16- by 1/4-inch square drive	

LOCATION	ITEM	ACTION **REMARKS**

REMOVAL

NOTE

Be sure the main harness to intervehicular cable and taillight cable metal identification bands are installed before removing the main harness. If identification bands are not installed, identify matching connectors using tags or tape.

1. Seven clamps (1)	Seven nuts (2), seven lockwashers (3), and seven screws (4)	Using 7/16-inch socket and screwdriver, remove.

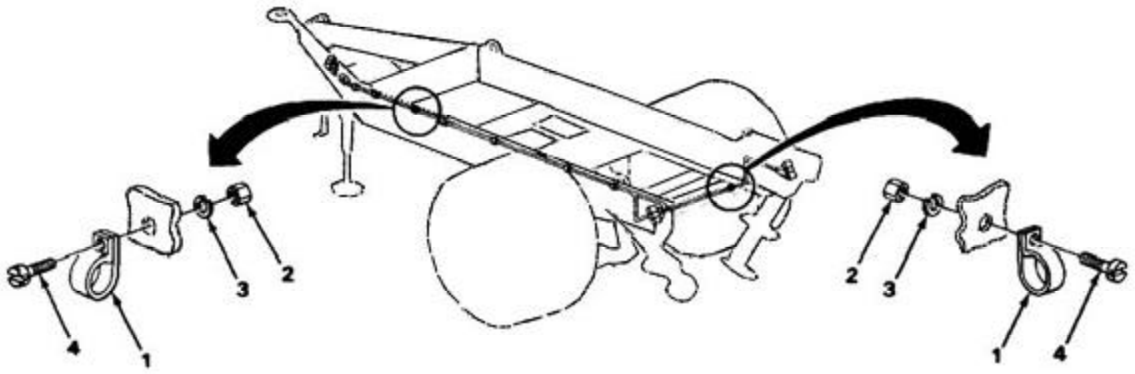

Super Single Style Shown

TA223316

MAIN HARNESS - CONTINUED

	LOCATION	ITEM	ACTION **REMARKS**
REMOVAL – CONTINUED			
2.	Chassis (1)	Seven grommets (2)	Using screwdriver, push through holes (3).
3.	Clip assemblies (4)	Three mated connectors (5 and 6)	Pull out and separate.
4.	Chassis (1)	Main harness (7)	Pull through holes (3) in chassis frame and remove.
5.	Main harness (7)	Seven clamps (8)	Remove.
6.		Seven grommets (2)	Remove.
INSTALLATION			
7.	Chassis (1)	Main harness (7)	Install through holes (3).
8.	Main harness (7)	Three mated connectors (5 and 6)	Match and push firmly together.
9.	Clip assemblies (4)	Three mated connectors (5 and 6)	Snap into place.
10.	Main harness (7)	Seven grommets (2)	Install at proper locations.
11.	Chassis (1)	Seven grommets (2)	Using screwdriver, carefully work into holes (3).
12.	Main harness (7)	Seven clamps (8)	Install at the proper locations.
13.	Seven clamps (8)	Seven screws (9), seven lockwashers (10), and seven nuts(11)	Using 7/16-inch socket and screwdriver, attach to chassis (1).

MAIN HARNESS - CONTINUED

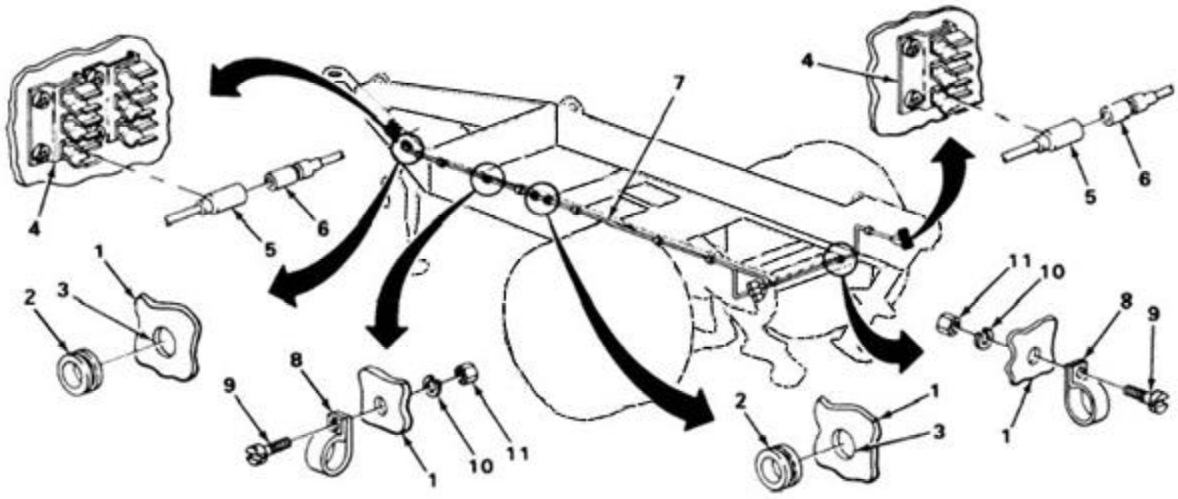

Super Single Style Shown

TASK ENDS HERE

WIRING HARNESS REPAIR

This task covers:

a. Male connector repair (page 4-28)
b. Female connector repair (page 4-28)
c. Ring terminal replacement (page 4-29)
d. Circuit band replacement (page 4-29)
e. Receptacle repair (page 4-30)

INITIAL SETUP

Tools	Materials/Parts
Iron, soldering	Terminals (as required)
Pliers, cutting	Shells (as required)
Pliers, slip-joint	New marker band
Screwdriver, flat-tip	Solder
Strippers, hand wire	
Tool, crimping	
Tool, engraving	

WIRING HARNESS REPAIR - CONTINUED

	LOCATION	ITEM	ACTION **REMARKS**
MALE CONNECTOR REPAIR			
1.	Wire lead (1)	Shell (2)	Slide back.
2.		Washer (3)	Take off.
3.		Shell (2)	Slide off over contact (4). **Throw away shell (2).**
4.		Contact (4)	Using cutting pliers, cut off. **Throw away contact (4).**
5.		Wire lead (1)	Strip off insulation equal to the depth of the new contact (4).
6.	Wire lead (1)	Shell (2)	Slide onto wire lead (1).
7.		Contact (4)	Using crimping tool, slide onto wire lead (1) and crimp.
8.		Washer (3)	a. Slide onto lead (1). b. Slide shell (2) over washer (3) and contact (4).
FEMALE CONNECTOR REPAIR			
9.	Wire lead (5)	Shell (6) and sleeve (7)	Slide back on wire lead (5).
10.		Contact (8)	Using cutting pliers, cut off. **Throw away contact (8).**
11.		Wire lead (5)	Strip off insulation equal to the depth of the new contact (8).
12.		Shell (6) and sleeve (7)	Slide onto wire lead (5).
13.		Contact (8), shell (6), and sleeve (7)	a. Using a crimping tool, slide contact (8) onto wire lead (5) and crimp. b. Slide shell (6) and sleeve (7) over contact (8).

WIRING HARNESS REPAIR - CONTINUED

LOCATION	ITEM	ACTION **REMARKS**
RING TERMINAL REPLACEMENT		
14. Wire lead (9)	Terminal (10)	Using cutting pliers, cut off. **Throw away terminal (10).**
15.	Wire (9)	Strip off insulation equal to the depth of the new terminal (10).
16. Wire lead (9)	Terminal (10)	a. Slide onto the end of wire (9). b. Using crimping tool, crimp.
CIRCUIT BAND MARKER REPLACEMENT		
17. Wire lead (11)	Marker band (12)	Using a flat-tip screwdriver, open tabs and remove. **Note number on band and throw band (12) away.**
18.	New marker band (12)	a. Using the engraving tool, engrave the number. b. Using crimping tool, put on wire lead (11) and bend tabs over.

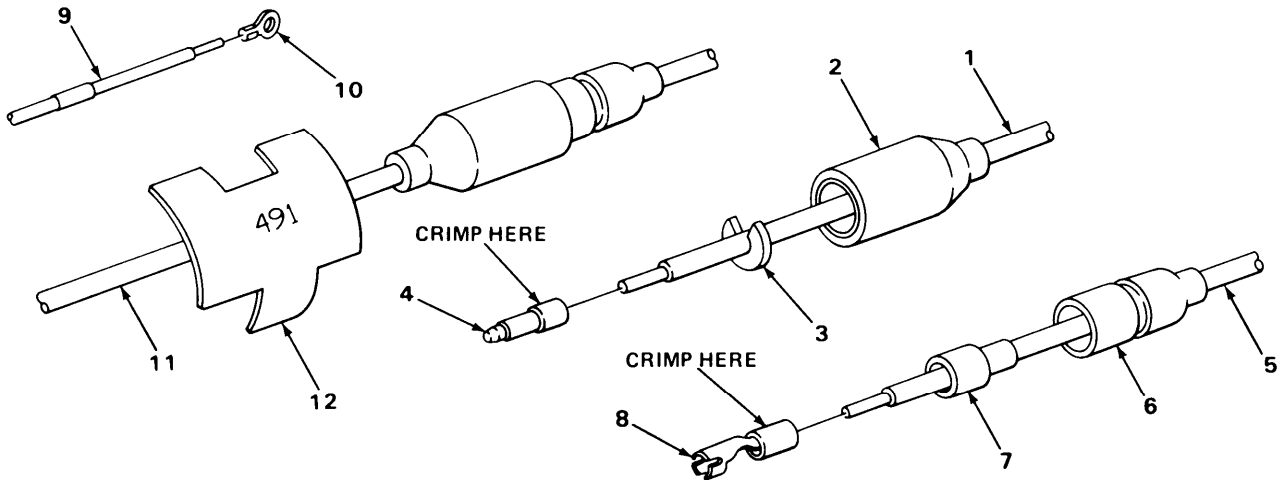

TA223318

WIRING HARNESS REPAIR - CONTINUED

	LOCATION	ITEM	ACTION **REMARKS**
RECEPTACLE REPAIR			
19.	Connector (1)	Nut (2)	Using pliers, take off.
20.		Grommet (3)	Take out.
21.	Grommet (3)	Pins (4)	Pull out of grommet.
22.	Pins (4)	Wire leads (5)	Remove by melting solder with soldering iron.

NOTE

Only unsolder the leads that need to be repaired.

23.	Pins (4)	Wire leads (5)	a. Heat the solder well in pin (4). b. While solder is hot, insert wire lead (5) into it.
24.	Grommet (3)	Pin (4)	Insert pin (4) into the grommet (3). **Follow chart to put pins in the proper location.**
25.	Connector (1)	Grommet (3)	Put grommet (3) into connector (1).
26.		Nut (2)	Using pliers, screw on.

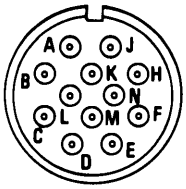

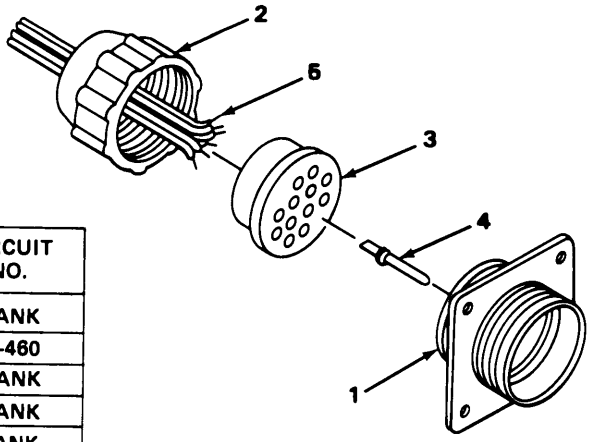

TERMINAL DESIGNATION	CIRCUIT NO.	TERMINAL DESIGNATION	CIRCUIT NO.
A	24–484	H	BLANK
B	22–461	J	22–460
C	24–483	K	BLANK
D	90	L	BLANK
E	21–489	M	BLANK
F	23	N	BLANK

TASK ENDS HERE

TA223319

Section VIII. AXLE

AXLE REMOVAL AND INSTALLATION

This task covers:

a. Removal (page 4-31)
b. Installation (page 4-34)

INITIAL SETUP

Tools

Handle, reversible, 3/8-inch square drive
Handle, reversible, 1/2-inch square drive
Hoist, 3000 pounds (1364 kg) min
Socket, deep, 1 1/8- by 1/2-inch
Socket, 9/16- by 3/8-inch square drive
Wrench, open-end, 7/16-inch
Wrench, open-end, 9/16-inch

Personnel Required

Two

Equipment Condition

Hub and drum assemblies removed (page 4-76).

LOCATION	ITEM	ACTION	REMARKS
REMOVAL			
1. Brake lever (1)	Handbrake cable (2)	Unhook.	

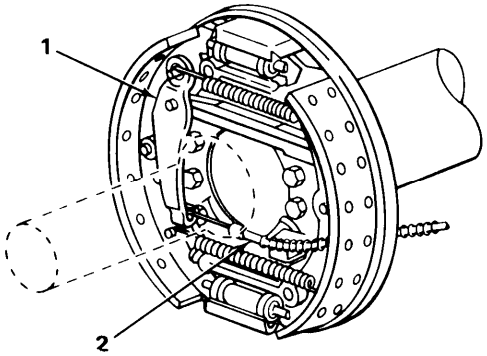

TA223320

AXLE REMOVAL AND INSTALLATION - CONTINUED

LOCATION		ITEM	ACTION **REMARKS**
REMOVAL – CONTINUED			
2.	Cable guide bracket (1)	Two nuts (2)	Using 9/16-inch socket, remove.
3.	Backing plate (3)	Handbrake cable (4)	Pull out.
4.	Connector (5)	Nut (6) and tube (7)	Using 7/16-inch wrench, disconnect.
5.	Backing plate (3) at axle (8)	Twelve nuts (9), twelve lockwashers (10), and twelve bolts (11)	Using 9/16-inch socket and 9/16-inch wrench, remove.

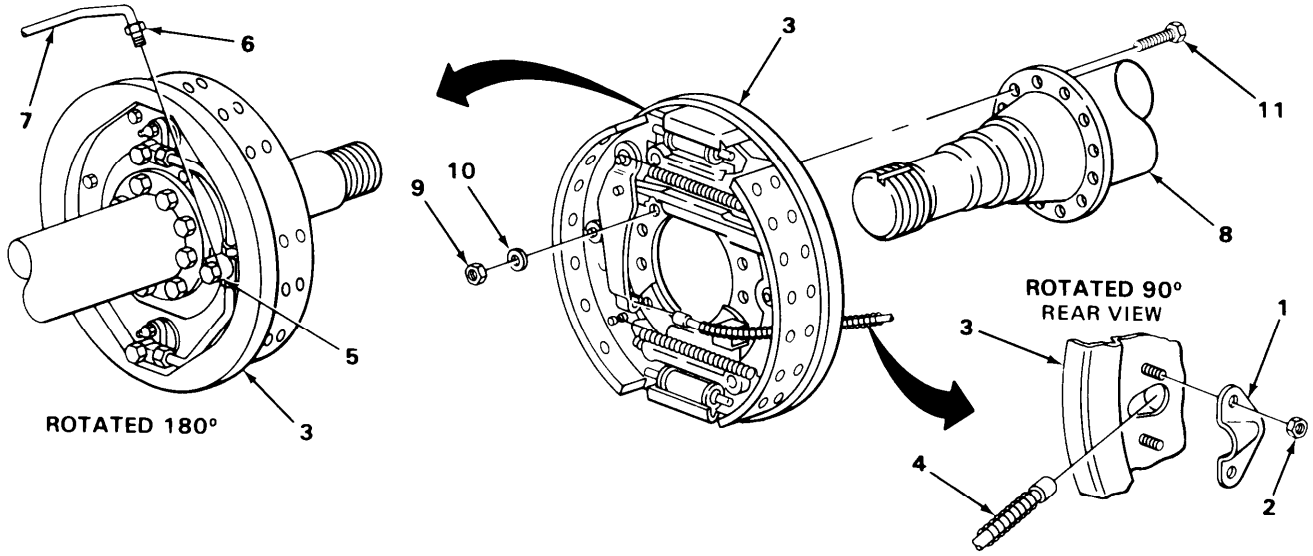

NOTE

Repeat steps 1 thru 5 for the opposite side.

6.	Tee (12)	Tube assemblies (13 and 14)	Using 7/16-inch wrench, disconnect.

TA223321

AXLE REMOVAL AND INSTALLATION - CONTINUED

	LOCATION	ITEM	ACTION **REMARKS**
7.	Tee (12)	Nut (15)	Using 9/16-inch wrench, remove.
8.	Four clamps (16)	Tube assemblies (13 and 14)	Pull from position.
9.	Chassis (17)	Two jack stands (18)	Using hoist, raise chassis (17) and position jack stands (18) at rear.
10.	Two U-bolts (19)	Four nuts (20), four lockwashers (21), and plate (22)	Using 1 1/8-inch socket, remove.

NOTE

Repeat step 10 for opposite side.

11.	Springs (23)	Axle (8)	Remove with assistance.

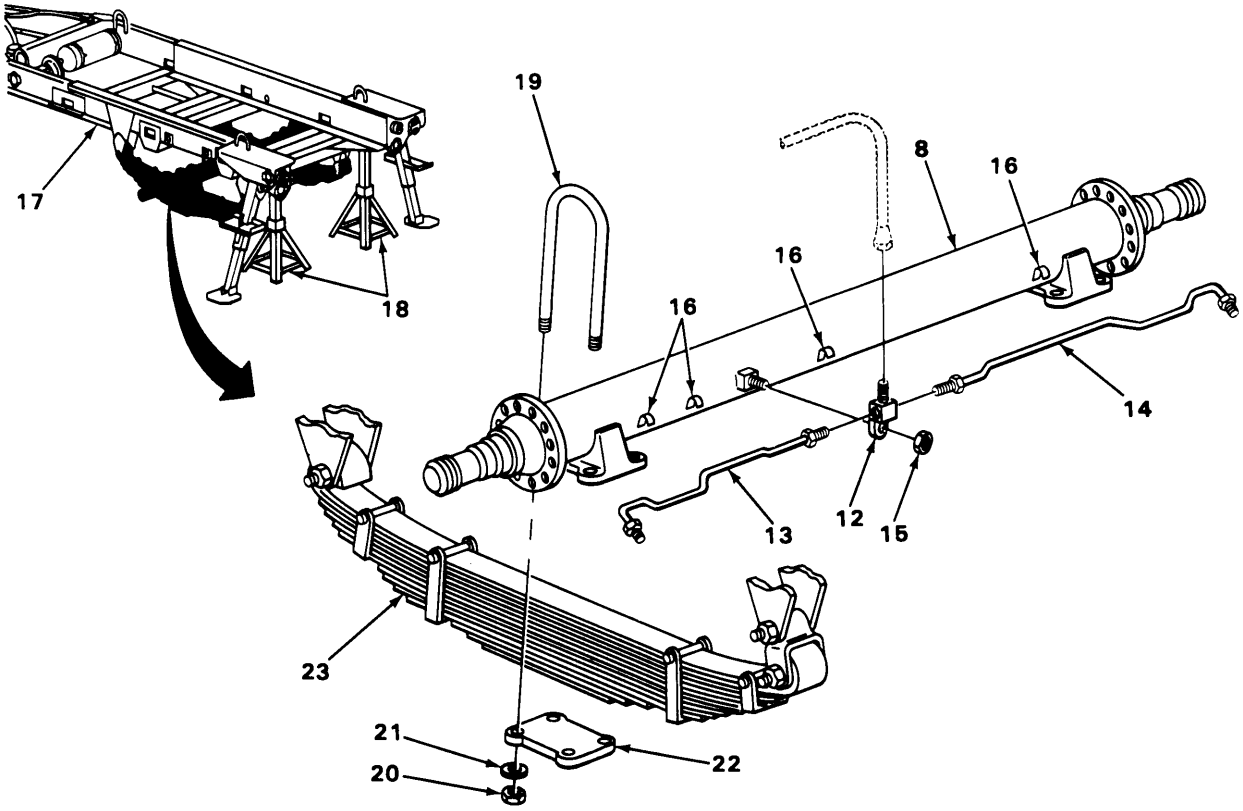

TA223322

AXLE REMOVAL AND INSTALLATION - CONTINUED

	LOCATION	ITEM	ACTION **REMARKS**
INSTALLATION			
12.	Spring (1)	Axle (2)	Position on spring (1) with assistance.
13.	Axle bracket (3)	Two U-bolts (4)	Place U-bolts (4) over axle (2) and through bracket (3).
14.	U-bolts (4)	Plate (5)	Position on U-bolts (4).
15.		Four lockwashers (6) and four nuts (7)	Using 1 1/8-inch socket, install.

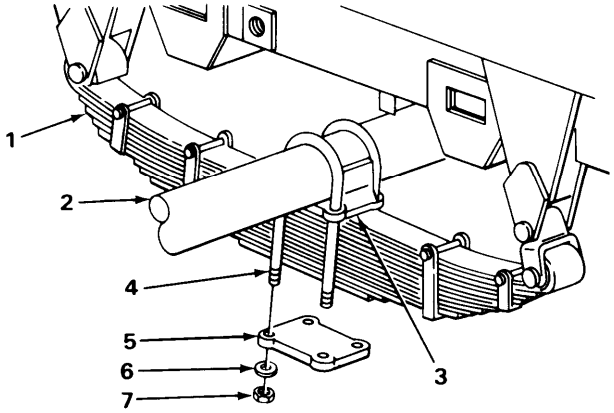

16.	Axle (2)	Backing plate (8)	Position on axle (2).
17.	Backing plate (8) at axle (2)	Twelve bolts (9), twelve lockwashers (10), and twelve nuts (11)	Using 9/16-inch socket and wrench, attach.

NOTE

Repeat steps 13 thru 17 for opposite side.

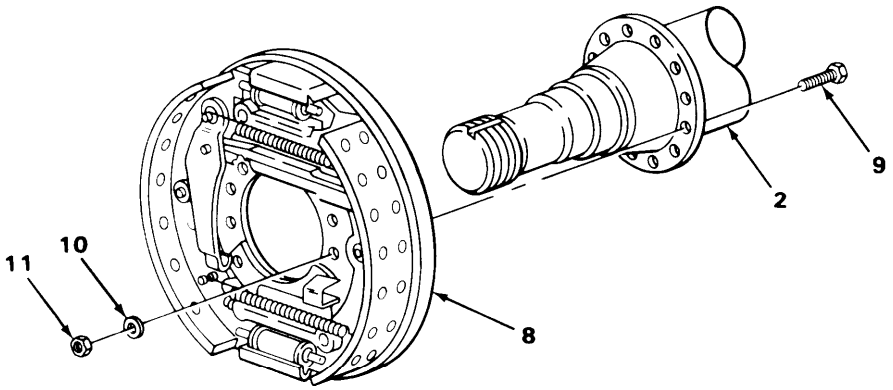

TA223323

AXLE REMOVAL AND INSTALLATION - CONTINUED

	LOCATION	ITEM	ACTION **REMARKS**
18.	Axle stud (12)	Tee (13) and nut (14)	Using 9/16-inch wrench, install.
19.	Four clamps (15)	Tube assemblies (16 and 17)	Press into clamps (15).
20.	Tee (13) and connector (18)	Tube assemblies (16 and 17)	Using 7/16-inch wrench, connect.

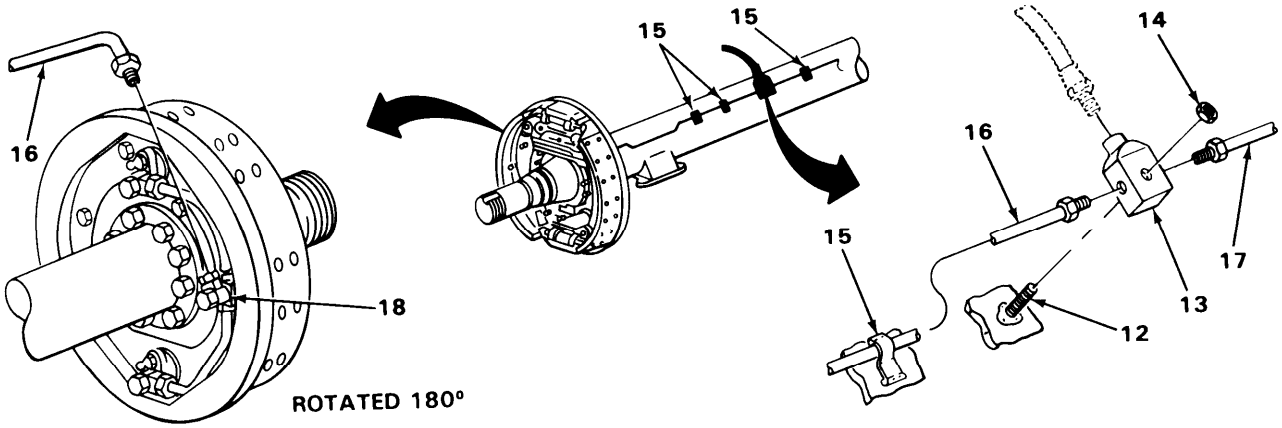

21.	Backing plate (19)	Handbrake cable (20)	Slide through backing plate (19).
22.		Cable guide bracket (21) and two nuts (22)	Using 9/16-inch socket, attach.
23.	Brake lever (23)	Cable (20)	Hook into position.

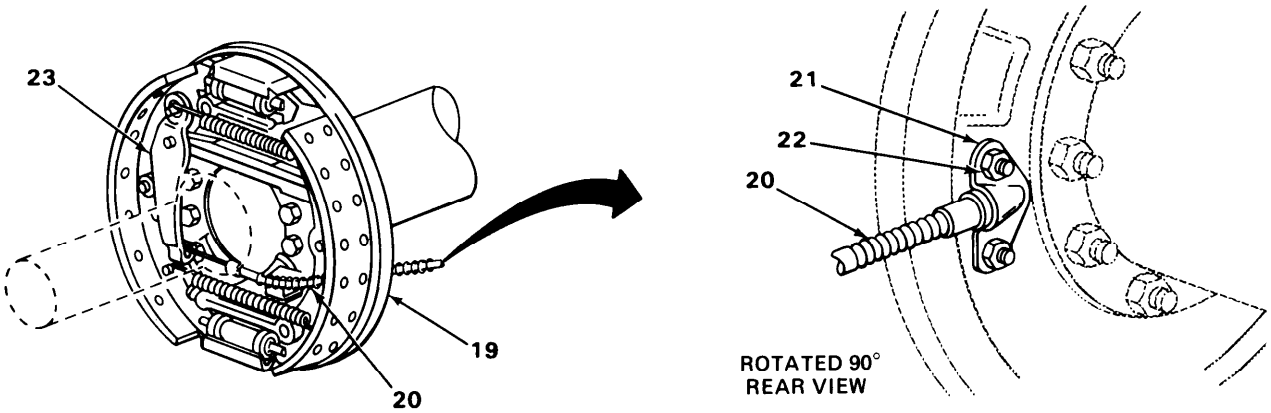

TA223324

AXLE REMOVAL AND INSTALLATION - CONTINUED

INSTALLATION – CONTINUED

NOTE

Repeat steps 21 thru 23 for the opposite side.

NOTE

FOLLOW-ON MAINTENANCE:

1. Install hub and drum assemblies (page 4-79).
2. Bleed brakes (page 4-55).

TASK ENDS HERE

Section IX. BRAKE SYSTEM

	Page
Airbrake Line Replacement	4-68
Airbrake System	4-75
Air Chamber	4-64
Air Coupling Quick Disconnects (Gladhands)	4-73
Air Filter Assembly	4-62
Air Reservoir	4-60
Air Reservoir Draincock	4-59
Handbrake Cable Assembly	4-38
Handbrake Lever Assembly	4-36
Hydraulic Brake Line Replacement	4-50
Hydraulic Master Cylinder	4-46
Hydraulic System Bleeding	4-55
Hydraulic Wheel Cylinder	4-48
Intervehicular Hoses	4-71
Relay Valve	4-57
Service Brake	4-41
Service Brake – Adjustment	4-46

HANDBRAKE LEVER ASSEMBLY

This task covers:

a. Removal (page 4-37)
b. Installation (page 4-37)

HANDBRAKE LEVER ASSEMBLY - CONTINUED

INITIAL SETUP

Tools

Handle, reversible, 3/8-inch square drive
Pliers, diagonal-cutting
Socket, 9/16- by 3/8-inch square drive

Tools- Continued

Wrench, box, 9/16-inch

Materials/Parts

Cotter pin

	LOCATION	ITEM	ACTION **REMARKS**
REMOVAL			
1.	Handbrake cable (1)	Cotter pin (2) and clevis pin (3)	Using pliers, remove. **Discard cotter pin (2).**
2.	Frame (4)	Three nuts (5), three spacers (6), three bolts (7), and hand brake lever (8)	Using 9/16-inch socket and box wrench, remove.
INSTALLATION			
3.	Frame (4)	Handbrake lever (8), three bolts (7), three spacers (6), and three nuts (5)	a. Position on frame with spacers (6) in place. b. Using wrench, install.
4.	Cable (1)	Clevis pin (3) and cotter pin (2)	Using pliers, install.

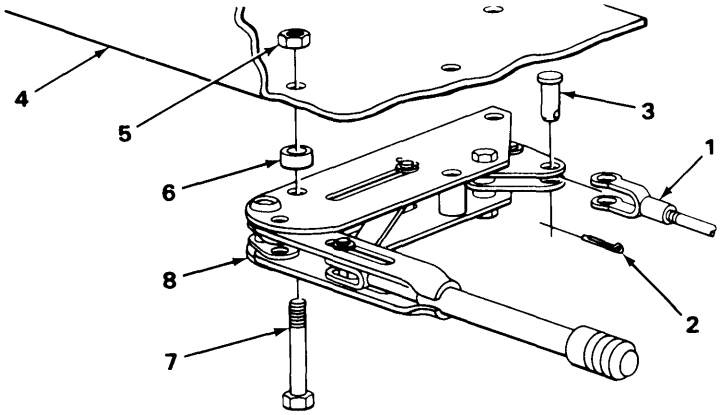

TASK ENDS HERE

TA223325

HANDBRAKE CABLE ASSEMBLY

This task covers:

a. Removal (page 4-38)
b. Installation (page 4-39)

INITIAL SETUP

Tools

Handle, reversible, 3/8-inch square drive
Pliers, diagonal-cutting
Screwdriver, cross-tip
Socket, 1/2- by 3/8-inch square drive
Wrench, open-end, 7/16-inch
Wrench, open-end, 1/2-inch

Materials/Parts

Cotter pin

Equipment Condition

Hub and drum removed (page 4-76).

LOCATION	ITEM	ACTION	REMARKS

REMOVAL

NOTE

This procedure is typical for both sides.

1.	Handbrake cable (1)	Cotter pin (2) and clevis pin (3)	Using pliers, remove.	**Discard cotter pin (2).**
2.	Retaining strap (4)	Two nuts (5), two lockwashers (6), and two capscrews (7)	Using 1/2-inch open-end and socket wrenches, remove.	**Retaining strap (4) and spacer (8) should fall off.**
3.	Cable clamp mounting bracket (9)	Clamp (10), nut (11), washer (12), and screw (13)	Using 1/2-inch open-end wrench and screwdriver, remove.	
4.	Internal lever (14)	Handbrake cable (1)	Remove.	
5.	Backing plate (15)	Two nuts (16), clamp (17), and handbrake cable (1)	a. Using 7/16-inch wrench, loosen nuts (16). b. Pull out handbrake cable (1).	

HANDBRAKE CABLE ASSEMBLY- CONTINUED

LOCATION	ITEM	ACTION **REMARKS**
INSTALLATION		
6. Backing plate (15)	Handbrake cable (1)	Push end through backing plate (15).
7. Brake lever (14)	Handbrake cable (1)	Pull back brake lever (14) and hook cable (1) in lever (14).
8. Backing plate (15)	Two nuts (16), clamp (17), and handbrake cable (1)	Using 7/16-inch wrench, secure.

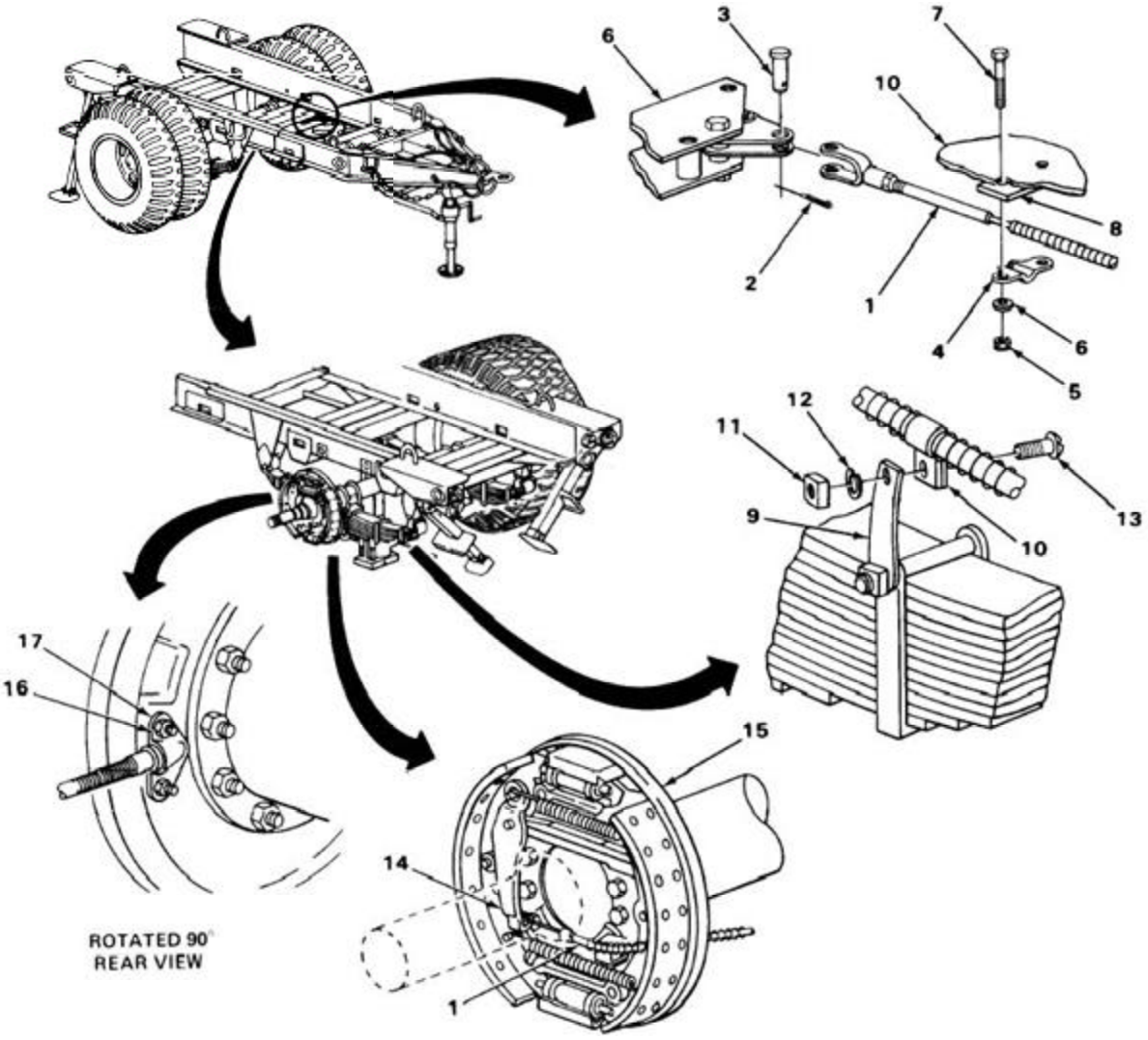

TA223326

HANDBRAKECABLE ASSEMBLY- CONTINUED

	LOCATION	ITEM	ACTION **REMARKS**
INSTALLATION – CONTINUED			
9.	Cable clamp mounting bracket (1)	Clamp (2), nut (3), lockwasher (4), and screw (5)	Using 1/2-inch open-end wrench and screwdriver, install.
10.	Frame (6) to hand-brake cable (7)	Spacer (8), retaining strap (9), two capscrews (10), two lockwashers (11), and two nuts (12)	Using 1/2-inch open-end and socket wrenches, install.
11.	Handbrake lever (13)	Adjusting knob (14)	a. Turn clockwise to tighten fully. b. Turn counterclockwise 12 turns.
12.	Handbrake cable (7)	Clevis (15) and locknut (16)	a. Using 1/2-inch open-end wrench, loosen locknut (16). b. Adjust clevis (15) so that hole alines with hole in handbrake lever (13). c. Using 1/2-inch open-end wrench, tighten locknut (16).
13.		Clevis pin (17) and cotter pin (18)	Using pliers, install.

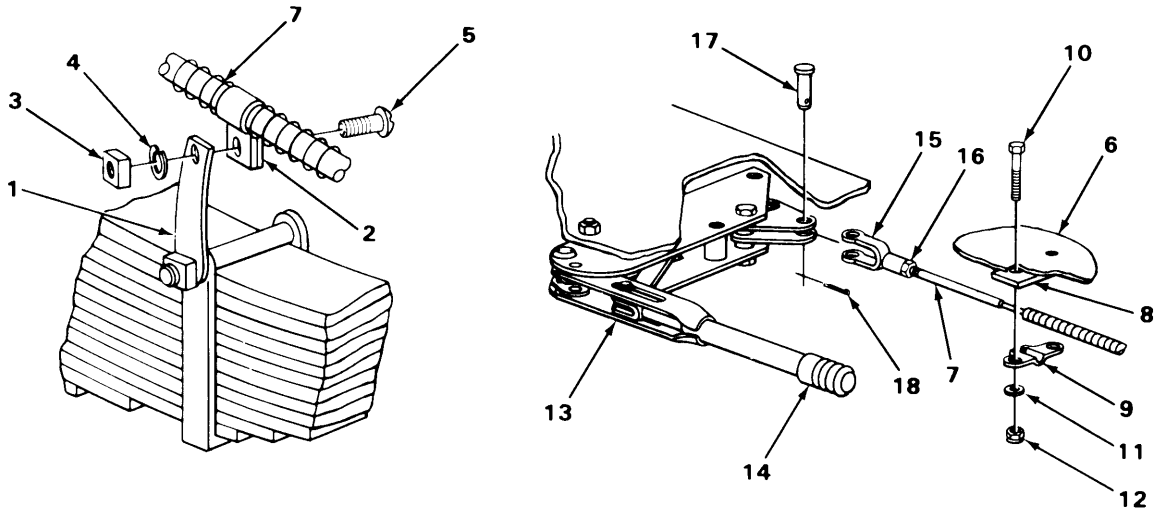

TA223327

HANDBRAKECABLE ASSEMBLY- CONTINUED

NOTE

FOLLOW-ON MAINTENANCE: Install hub and drum (page 4-79).

TASK ENDS HERE

SERVICE BRAKE

This task covers:

a. Disassembly (page 4-41)
b. Inspection (page 4-43)
c. Assembly (page 4-44)

INITIAL SETUP

Tools

Extension, 6- by 3/8-inch square drive
Handle, reversible, 3/8-inch square drive
Pliers, brake-repair
Pliers, needle-nose
Socket, 7/16- by 3/8-inch square drive

Tools – Continued

Socket, 9/16- by 3/8-inch square drive
Wrench, open-end, 9/16-inch

Equipment Condition

Hub and drum removed (page 4-76).

LOCATION	ITEM	ACTION	**REMARKS**

DISASSEMBLY

WARNING

All parts of the service brake assembly will be coated with asbestos dust from the brake linings. A filter mask should be worn whenever working on any assembly components. Breathing asbestos dust may cause serious damage to health.

NOTE

This is a typical procedure for the left or right service brake.

SERVICE BRAKE - CONTINUED

	LOCATION	ITEM	ACTION **REMARKS**
DISASSEMBLY – CONTINUED			
1.	Pins (1, 2, 3, and 4)	Two springs (5)	Using brake-repair pliers, remove.
2.	Brake lever (6)	Handbrake cable (7)	Unhook.
3.	Pins (1 and 4)	Two clips (8), two flat washers (9), and two wave washers (10)	Using needle-nose pliers, remove.
4.	Pin (1)	Brake lever (6)	Slide off.
5.	Pin (4)	Strut (11)	Slide off.
6.	Brakeshoe (12)	Capscrew (13), lock-washer (14), flat washer (15), and sleeve (16)	Using 7/16-inch socket wrench, remove.
7.	Brakeshoe (17)	Nut (18), lockwasher (19), flat washer (20), sleeve (21), and bolt (22)	Using 7/16-inch socket wrench, remove.
8.	Backing plate (23)	Brakeshoes (12 and 17)	Remove.
9.		Four capscrews (24), four lockwashers (25), four nuts (26), and adjuster (27)	Using 9/16-inch socket and open-end wrenches, remove.
10.		Four capscrews (24), four lockwashers (25), four nuts (26), adjuster (28), and cable guide (29)	Using 9/16-inch socket and open-end wrenches, remove.
11.	Brakeshoes (12 and 17)	Pins (1, 2, 3, and 4), four nuts (30), and four lockwashers (31)	Using 9/16-inch socket wrench, remove.

SERVICE BRAKE - CONTINUED

LOCATION	ITEM	ACTION **REMARKS**

INSPECTION

12.	Brakeshoe (12)	Lining (1) and rivets (2)	Inspect linings (1) for cracks and a minimum thickness of 1/8 inch (3.2 mm). **Rivets (2) should beat least 1/16 inch (1.6 mm) below the surface of the lining (1).**

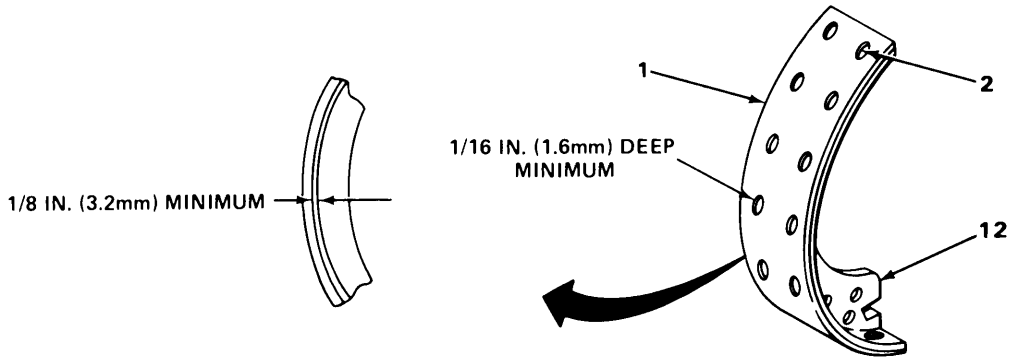

TA223328

SERVICE BRAKE - CONTINUED

LOCATION	ITEM	ACTION **REMARKS**
INSPECTION CRITERIA – CONTINUED		
	NOTE Repeat step 12 for other brakeshoe.	
ASSEMBLY		
13. Brakeshoes (1 and 2)	Pins (3, 4, 5, and 6), four nuts (7), and four lockwashers (8)	Using 9/16-inch socket wrench, install.
14. Backing plate (9)	Four capscrews (10), four lockwashers (11), four nuts (12), adjuster (13), and cable guide (14)	Using 9/16-inch socket and open-end wrenches, install.
15.	Four capscrews (10), four lockwashers (11), four nuts (12), and adjuster (15)	Using 9/16-inch socket and open-end wrenches, install.
16.	Brakeshoe (1)	Place in position.
17. Brakeshoe (1)	Nut (16), lockwasher (17), flat washer (18), sleeve (19), and bolt (20)	Using 9/16-inch socket wrench, install.
18. Backing plate (9)	Brakeshoe (2)	Place in position.
19. Brakeshoe (2)	Capscrew (21), lock-washer (22), flat washer (23), and sleeve (24)	Using 9/16-inch socket wrench, install.
20. Pin (3)	Strut (25)	Slide on.
21. Pin (4)	Brake lever (26)	Slide on. **Pin on brake lever should engage slot in strut (25).**

SERVICE BRAKE - CONTINUED

	LOCATION	ITEM	ACTION **REMARKS**
22.	Pins (3 and 4)	Two clips (27), two flat washers (28), and two wave washers (29)	Using pliers, install.
23.	Pins (3, 4,5, and 6)	Two springs (30)	Using brake-repair pliers, install.
24.	Brake lever (26)	Handbrake cable (31)	Hook into place.

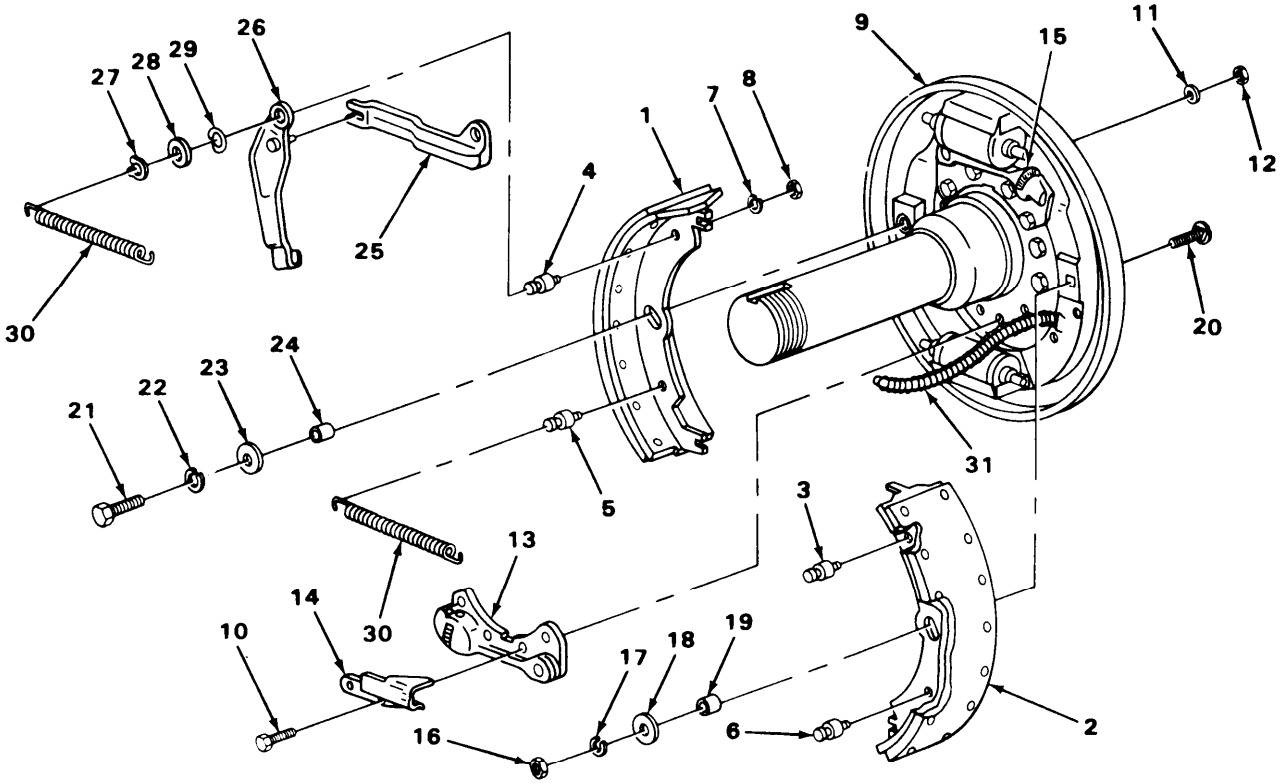

NOTE

FOLLOW-ON MAINTENANCE: Install hub and drum (page 4-79).

TASK ENDS HERE

TA223329

SERVICE BRAKE -ADJUSTMENT

This task covers:

Adjustment

INITIAL SETUP

Tools	Equipment Condition
Wrench, open-end, 5/8-inch	Adjust wheel bearings (page 4-80).

LOCATION	ITEM	ACTION **REMARKS**
	NOTE Procedure is given for right side wheel. For left side, turn adjusting stud clockwise.	
1. Backing plate (1)	Upper shoe adjusting stud (2)	a. Using wrench, turn counterclockwise until wheel locks. b. Back off just enough to allow wheel to turn freely.
2.	Lower shoe adjusting stud (3)	Repeat step 1.

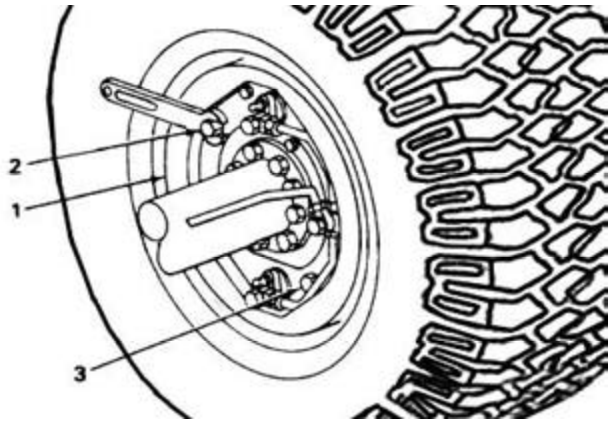

Super Single Style Shown

TASK ENDS HERE

HYDRAULIC MASTER CYLINDER

This task covers:

a. Removal (page 4-47)
b. Installation (page 4-47)

TA223330

HYDRAULIC MASTER CYLINDER - CONTINUED

INITIAL SETUP

Tools
- Handle, reversible, 3/8-inch square drive
- Socket, 9/16- by 3/8-inch square drive

Tools – Continued
- Wrench, open-end, 7/16-inch
- Wrench, open-end, 5/8-inch

LOCATION	ITEM	ACTION **REMARKS**
REMOVAL		
1. Fitting (1)	Brake line (2)	Using 5/8- and 7/16-inch open-end wrenches, disconnect.
2. Master cylinder (3)	Three nuts (4) and three lock-washers (5)	Using 9/16-inch socket wrench, remove and take off master cylinder (3).
INSTALLATION		
3. Air chamber studs (6)	Master cylinder (3)	Position on studs (6).
4.	Three nuts (4) and three lock-washers (5)	Using 9/16-inch socket wrench, install.
5. Fitting (1)	Brake line (2)	Using 5/8- and 7/16-inch open-end wrenches, install.

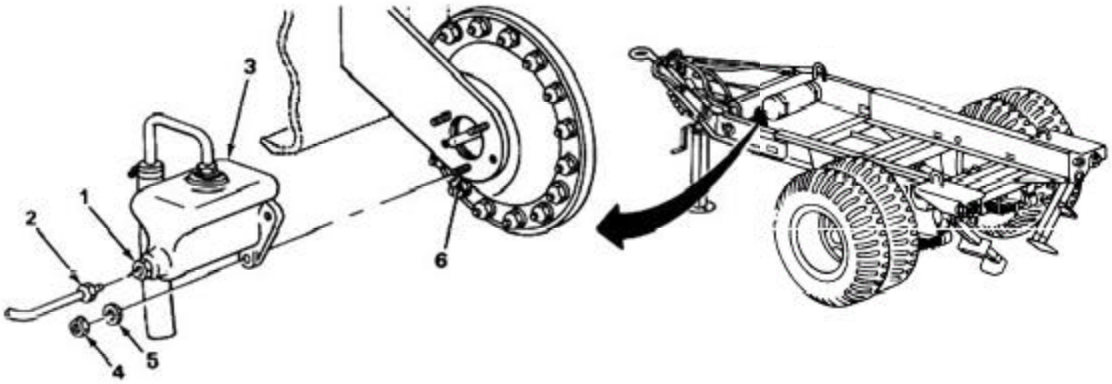

TA223331

HYDRAULIC MASTER CYLINDER - CONTINUED

NOTE

FOLLOW-ON MAINTENANCE: Bleed brakes (page 4-55).

TASK ENDS HERE

HYDRAULIC WHEEL CYLINDER

This task covers:

a. Removal (page 4-48)
b. Installation (page 4-49)

INITIAL SETUP

Tools

Handle, reversible, 3/8-inch square drive
Socket, 1/2- by 3/8-inch square drive
Socket, 11/16- by 3/8-inch square drive

Materials/Parts

Container
Washer, copper

Equipment Condition

Brakeshoes removed (page 4-41).

LOCATION	ITEM	ACTION	REMARKS

REMOVAL

WARNING

All parts of the service brake assembly will be coated with asbestos dust from the brake linings. A filter mask should be worn whenever working on any assembly components. Breathing asbestos dust may cause serious damage to health.

NOTE

Place a container under backing plate to catch brake fluid.

1.	Connector (1)	Bolt (2) and washers (3 and 4)	Using 11/16-inch socket wrench, remove. **Discard washers (3 and 4).**	
2.	Backing plate (5)	Two bolts (6)	Using 1/2-inch socket wrench, remove.	
3.		Wheel cylinder (7) and spark shield (8)	Remove and separate.	

HYDRAULIC WHEEL CYLINDER - CONTINUED

LOCATION	ITEM	ACTION **REMARKS**
INSTALLATION		
4. Backing plate (5)	Wheel cylinder (7) and spark shield (8)	Place spark shield (8) on wheel cylinder (7) and position on backing plate (5).
5.	Two bolts (6)	Using 1/2-inch socket wrench, install.
6.	Connector (1) and washer (4)	Position on backing plate (5).
7. Connector (1)	Bolt (2) and washer (3)	Using 11/16-inch socket wrench, install.

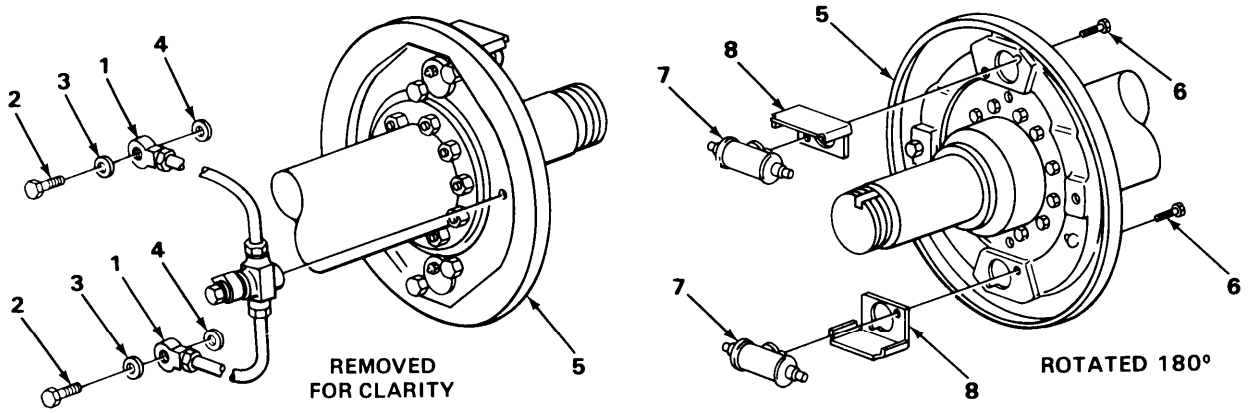

NOTE

FOLLOW-ON MAINTENANCE:

1. Install brakeshoes (page 4-44).
2. Bleed brakes (page 4-55).

TASK ENDS HERE

TA223332

HYDRAULIC BRAKE LINE REPLACEMENT

This task covers:

a. Master cylinder to union (page 4-50)
b. Union to axle flex hose (page 4-51)
c. Axle flex hose (page 4-52)
d. Axle tee to left service brake (page 4-52)
e. Axle tee to right service brake (page 4-54)

INITIAL SETUP

Tools

Screwdriver, cross-tip
Wrench, open-end, 7/16-inch
Wrench, open-end, 1/2-inch
Wrench, open-end, 5/8-inch
Wrench, open-end, 15/16-inch

Materials/Parts

New lines (as required)

	LOCATION	ITEM	ACTION **REMARKS**
MASTER CYLINDER TO UNION			
1.	Line (1) to master cylinder (2)	Fitting (3)	Using 5/8- and 7/16-inch open-end wrenches, remove.
2.	Clamps (4) to frame (5)	Two screws (6), two lockwashers (7), and two nuts (8)	Using 7/16-inch open-end wrench and cross-tip screwdriver, remove.
3.	Union (9) to line(1)	Fitting (10)	Using 7/16- and 1/2-inch open-end wrenches, remove.
4.	Frame (5)	Grommet (11)	Remove.
5.		Line (1)	Remove.
6.	Line (1)	Two clamps (4)	Remove. **Discard line (1).**
7.	New line	Two clamps (4)	Install.
8.	Frame (5)	Line (1)	Place in position.
9.		Grommet (11)	Install.
10.	Union (9) to line (1)	Fitting (10)	Using 7/16- and 1/2-inch open-end wrenches, install.

HYDRAULIC BRAKE LINE REPLACEMENT - CONTINUED

	LOCATION	ITEM	ACTION **REMARKS**
11.	Clamps (4) to frame (5)	Two screws (6), two lockwashers (7), and two nuts (8)	Using 7/16-inch open-end wrench and cross-tip screwdriver, install.
12.	Line (1) to master cylinder (2)	Fitting (3)	Using 7/16- and 5/8-inch open-end wrenches, install.
UNION TO AXLE FLEX HOSE			
13.	Line (12) to union (9)	Fitting (13)	Using 7/16- and 1/2-inch open-end wrenches, remove.
14.	Clamps (14) to frame (5)	Two screws (15), two lockwashers (16), and two nuts (17)	Using 7/16-inch open-end wrench and cross-tip screwdriver, remove.
15.	Line (12) to flex hose (18)	Fitting (19)	Using 7/16- and 5/8-inch open-end wrenches, remove.
16.	Frame (5)	Grommet (20)	Remove.
17.		Line (12)	Remove.

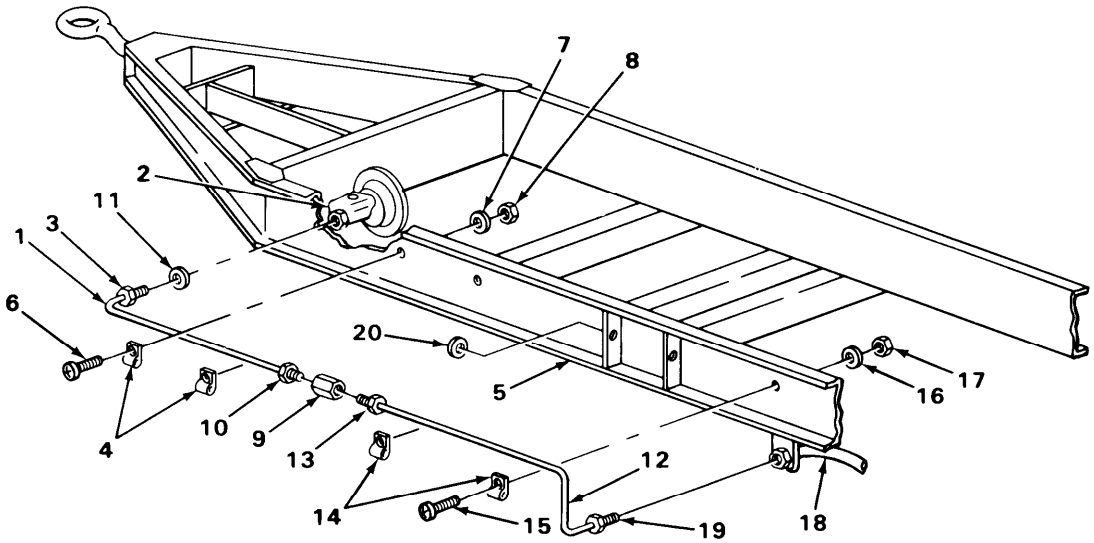

TA223333

HYDRAULIC BRAKE LINE REPLACEMENT - CONTINUED

	LOCATION	ITEM	ACTION **REMARKS**
UNION TO AXLE FLEX HOSE – CONTINUED			
18.	Line (1)	Two clamps (2)	Remove. **Discard line (1).**
19.	New line (1)	Two clamps (2)	Install.
20.	Frame (3)	Line (1)	Place in position.
21.		Grommet (4)	Install.
22.	Line (1) to flex hose (5)	Fitting (6)	Using 7/16- and 5/8-inch open-end wrenches, install.
23.	Clamps (2) to frame (3)	Two screws (7), two lockwashers (8), and two nuts (9)	Using 7/16-inch open-end wrench and cross-tip screwdriver, install.
24.	Line (1) to union (10)	Fitting (11)	Using 7/16- and 1/2-inch open-end wrenches, install.
AXLE FLEX HOSE			
25.	Axle flex hose (5) to line (1)	Fitting (6)	Using 7/16- and 5/8-inch open-end wrenches, remove.
26.	Axle flex hose (5) to bracket (12)	Nut (13)	Using 5/8- and 15/16-inch open-end wrenches, remove.
27.	Axle tee (14)	Axle flex hose (5)	Using 5/8-inch open-end wrench, remove. **Discard hose (5).**
28.		New axle flex hose (5)	Using 5/8-inch open-end wrench, install.
29.	Axle flex hose (5) to bracket (12)	Nut (13)	Using 5/8- and 15/16-inch open-end wrenches, install.
30.	Axle flex hose (5) to line (1)	Fitting (6)	Using 7/16- and 5/8-inch open-end wrenches, install.
AXLE TEE TO LEFT SERVICE BRAKE			
31.	Axle tee (14) to line (15)	Fitting (16)	Using 7/16-inch open-end wrench, remove.

HYDRAULIC BRAKE LINE REPLACEMENT- CONTINUED

	LOCATION	ITEM	ACTION **REMARKS**
32.	Line (15) to connector (17)	Fitting (18)	Using 7/16-inch open-end wrench, remove.
33.	Two clips (19)	Line (15)	Remove. **Discard line (15).**
34.	Two clips (19)	New line (15)	Place in position.
35.	Line (15) to connector (17)	Fitting (18)	Using 7/16-inch open-end wrench, install.
36.	Axle tee (14) to line (15)	Fitting (16)	Using 7/16-inch open-end wrench, install.

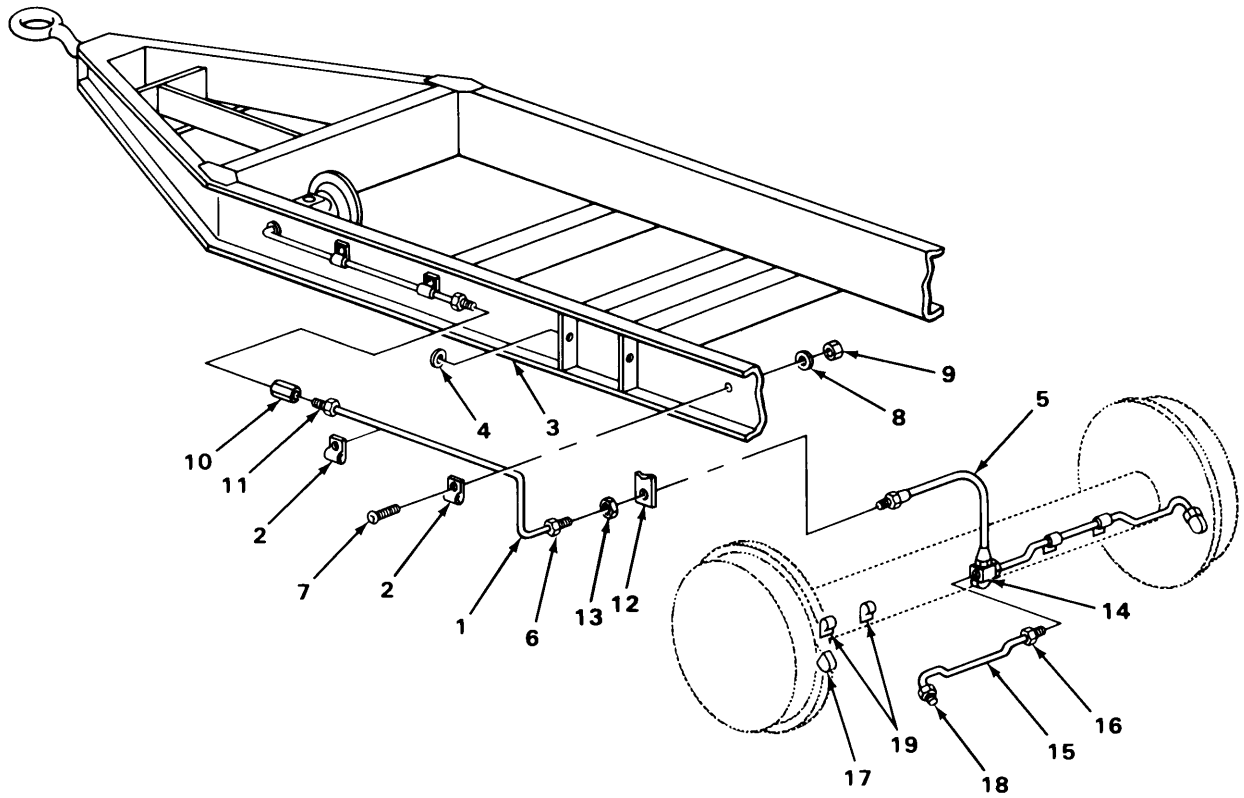

TA223334

HYDRAULIC BRAKE LINE REPLACEMENT - CONTINUED

	LOCATION	ITEM	ACTION **REMARKS**
AXLE TEE TO RIGHT SERVICE BRAKE			
37.	Axle tee (1) to line (2)	Fitting (3)	Using 7/16-inch open-end wrench, remove.
38.	Connector (4) to line (2)	Fitting (5)	Using 7/16-inch open-end wrench, remove.
39.	Two clips (6)	Line (2)	Remove. **Discard line (2).**
40.		New line (2)	Install.
41.	Connector (4) to line (2)	Fitting (5)	Using 7/16-inch open-end wrench, install.
42.	Axle tee (1) to line (2)	Fitting (3)	Using 7/16-inch open-end wrench, install.

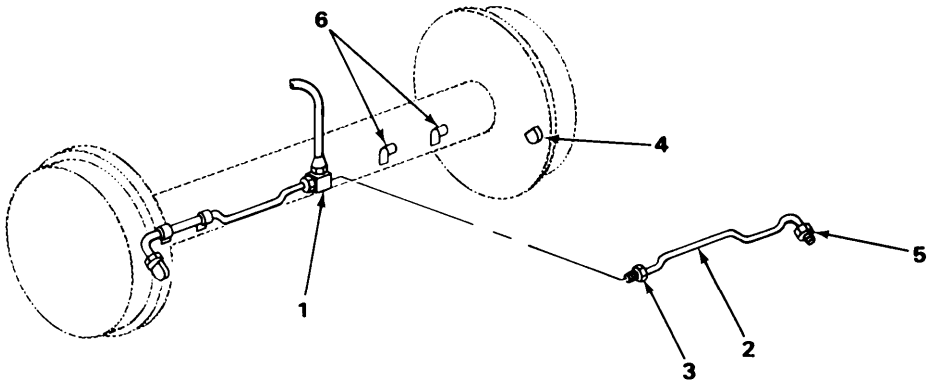

NOTE

FOLLOW-ON MAINTENANCE: Bleed brakes (page 4-55.)'

TASK ENDS HERE

TA223335

HYDRAULIC SYSTEM BLEEDING

This task covers:

a. Manual bleeding (page 4-56)
b. Pressure bleeding (page 4-56)

INITIAL SETUP

Tools

Pressure bleeder
Wrench, open-end, 7/16-inch

Materials/Parts

Brake fluid (item 2, appendix E)

Materials/Parts – Continued

Container
Plastic tubing

Personnel Required

Two

LOCATION	ITEM	ACTION	REMARKS

NOTE

Use the manual bleeding procedure only if a pressure bleeder is not available.

The trailer must be connected to the towing vehicle to manually bleed brakes.

The following procedure is typical for both left and right wheels.

Always bleed the wheel cylinder farthest from the master cylinder first.

Always bleed the lower cylinder first on a dual-wheel cylinder brake.

Check fluid level of master cylinder frequently during manual bleeding procedure and replenish as required. Failure to keep filled will allow air to enter the hydraulic system.

Refer to manufacturer's instructions for proper operation and servicing of the pressure bleeder.

HYDRAULIC SYSTEM BLEEDING - CONTINUED

LOCATION	ITEM	ACTION **REMARKS**
MANUAL BLEEDING		
1. Right wheel at lower cylinder bleed fitting (1)	Plastic tubing (2)	Push tubing (2) onto bleed fitting (1). **Tubing (2) should be long enough to reach ground when connected.**
2.	Container (3)	Fill container half full with brake fluid and position by wheel being bled.
3.	Tubing (2)	Submerge free end in brake fluid.

NOTE

Assistant should pump brake pedal slowly while brakes are bled.

Make sure free end of tubing stays submerged in fluid.

4.	Bleed fitting (1)	a. Using 7/16-inch wrench, open fitting (1) three-quarter turn. **Fluid and air will be forced through tube. Continue until no more air bubbles appear in fluid.** b. Close fitting (1) and remove tubing (2).

NOTE

Steps 1 thru 4 should be repeated for upper wheel cylinder and left wheel.

PRESSURE BLEEDING

NOTE

The pressure bleeder should be connected to the master cylinder according to manufacturer's instructions for proper operation.

After the pressure bleeder is hooked up properly, follow the manual bleeding procedure with the exception of pumping the brake pedal.

HYDRAULIC SYSTEM BLEEDING - CONTINUED

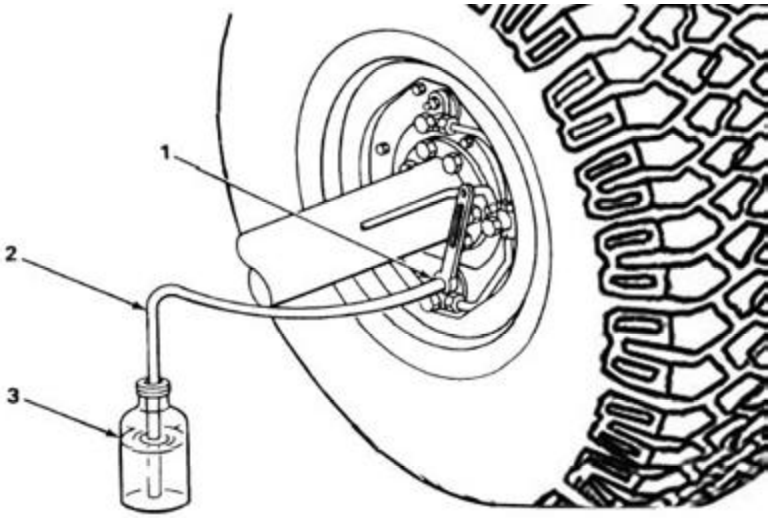

Super Single Style Shown

NOTE
Master cylinder vent must be checked for proper operation.
Replace any worn or damaged parts.

TASK ENDS HERE

RELAY VALVE

This task covers:
a. Removal (page 4-58)
b. Installation (page 4-58)

INITIAL SETUP

Tools

Wrench, open-end, 9/16-inch (two)
Wrench, open-end, 5/8-inch
Wrench, open-end, 7/8-inch

RELAY VALVE - CONTINUED

LOCATION	ITEM	ACTION **REMARKS**
REMOVAL		
	WARNING Wear protective goggles to prevent eye injury when opening air reservoir draincock. Step away from airstream.	
1. Air reservoir (1)	Draincock (2)	Open and relieve all pressure. **Close when finished.**
2. Relay valve (3)	Four lines (4)	Using 5/8- and 7/8-inch open-end wrenches, disconnect.
3. Mount (5)	Two nuts (6), two lockwashers (7), and two bolts (8)	Using two 9/16-inch open-end wrenches, remove. Take out relay valve (3).
INSTALLATION		
4. Mount (5)	Relay valve (3)	Position on mount (5).
5. Mount (5)	Two nuts (6), two lockwashers (7), and two bolts (8)	Using two 9/16-inch open-end wrenches, install.
6. Relay valve (3)	Four lines (4)	Using 5/8- and 7/8-inch open-end wrenches, connect.

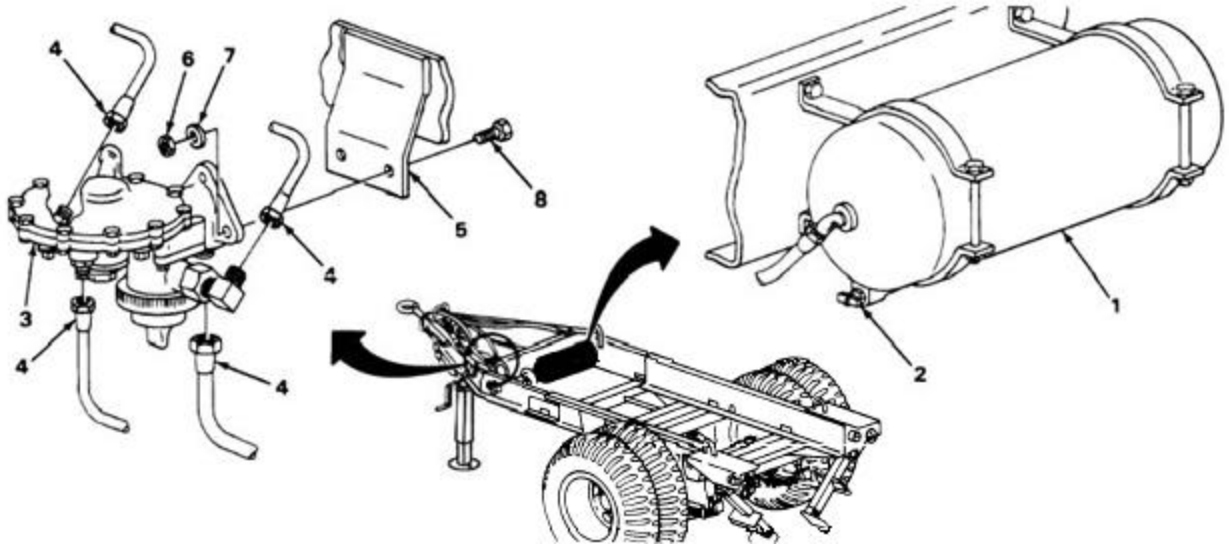

TA223337

RELAY VALVE - CONTINUED

NOTE

FOLLOW-ON MAINTENANCE: Test for leaks (page 4-75).

TASK ENDS HERE

AIR RESERVOIR DRAINCOCK

This task covers:

Replacement

INITIAL SETUP

Tools

Wrench, open-end, 9/16-inch

LOCATION	ITEM	ACTION	REMARKS
		WARNING	
		Wear protective goggles to prevent eye injury when opening air reservoir draincock. Step away from airstream.	
Air reservoir (1)	Draincock (2)	a. Open draincock (2) and release all air pressure in reservoir (1). b. Using 9/16-inch open-end wrench, remove. c. Using 9/16-inch open-end wrench, install.	

TASK ENDS HERE

TA223338

AIR RESERVOIR

This task covers:

a. Removal (page 4-60)
b. Installation (page 4-60)

INITIAL SETUP

Tools

Handle, reversible, 3/8-inch square drive
Socket, 9/16- by 3/8-inch square drive
Wrench, adjustable
Wrench, open-end, 9/16-inch
Wrench, open-end, 13/16-inch

Materials/Parts

Sealing compound (item 8, appendix E)

Equipment Condition

Draincock removed (page 4-59).

	LOCATION	ITEM	ACTION **REMARKS**
REMOVAL			
1.	Elbow (1)	Air line (2)	Using 13/16-inch wrench, disconnect.
2.	Air reservoir (3)	Elbow (1)	Using adjustable wrench, remove.
3.	Support clamps (4 and 5)	Two nuts (6), two lockwashers (7), and two bolts (8)	Using 9/16-inch socket and open-end wrenches, remove.
4.	Support clamps (4)	Two nuts (9), two lockwashers (10), and two bolts (11)	Using 9/16-inch socket and open-end wrenches, remove.
5.	Air reservoir (3)	Two support clamps (4)	Remove and lift air reservoir (3) from support clamps (5).
INSTALLATION			
6.	Support clamps (5)	Air reservoir (3)	Position on support clamps (5).
7.	Air reservoir (3)	Two Support clamps (4)	Position on air reservoir (3) and frame crossmember (12).

AIR RESERVOIR - CONTINUED

	LOCATION	ITEM	ACTION **REMARKS**
8.	Support clamps (4)	Two nuts (9), two lockwashers (10), and two bolts (11)	Using 9/16-inch socket and wrench, install on frame crossmember.
9.	Support clamps (4 and 5)	Two nuts (6), two lockwashers (7), and two bolts (8)	Using 9/16-inch socket and wrench, install.
10.	Air reservoir (3)	Elbow (1)	Coat threads with sealing compound and using adjustable wrench, install.
11.	Elbow (1)	Air line (2)	Using 13/16-inch wrench, install.

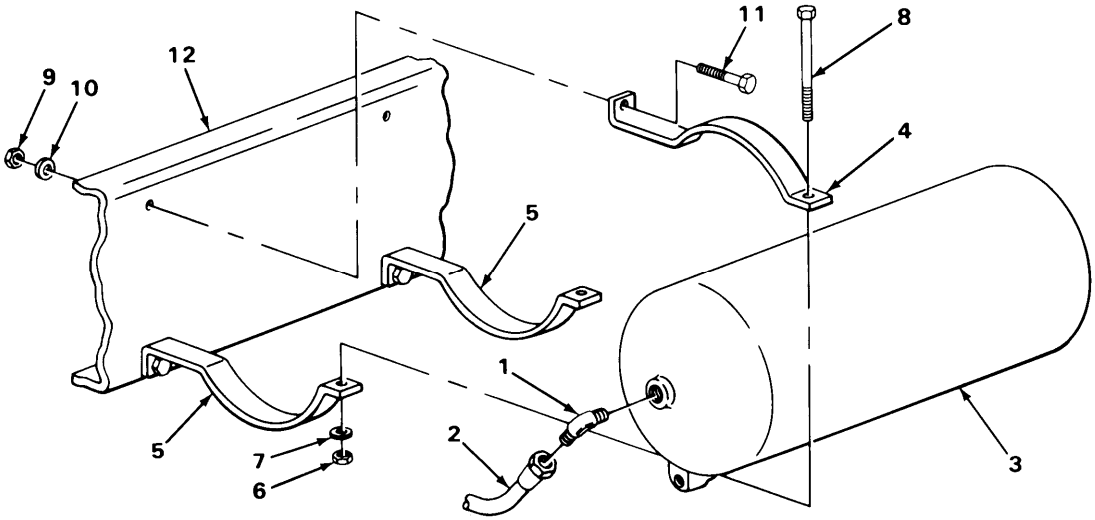

NOTE

FOLLOW-ON MAINTENANCE:

1. Install draincock (page 4-59).
2. Test for leaks (page 4-75).

TASK ENDS HERE

TA223339

AIR FILTER ASSEMBLY

This task covers:

a. Repair (page 4-62)
b. Removal (page 4-63)
c. Installation (page 4-63)

INITIAL SETUP

Tools

Handle, reversible, 1/2-inch square drive
Socket, 1 1/8-by 1/2-inch square drive
Wrench, adjustable
Wrench, open-end, 7/8-inch (two)

Tools – Continued

Wrench, open-end, 1 1/4-inch
Wrench, open-end, 1 3/8-inch

Materials/Parts
New filter (as required)

LOCATION	ITEM	ACTION **REMARKS**
REPAIR		
1. Air filter (1)	Plug (2)	a. Using adjustable wrench, remove to drain air filter (1).
		b. Using adjustable wrench, install.
2. Filter body (3)	Adapter (4) and gasket (5)	Using 1 1/8-inch socket, remove.
3.	Spring (6), washer (7)	a. Remove and clean or replace all parts.
	and element (8)	b. Insert in filter body (3),
4.	Adapter (4) and gasket (5)	Using 1 1/8-inch socket, install.

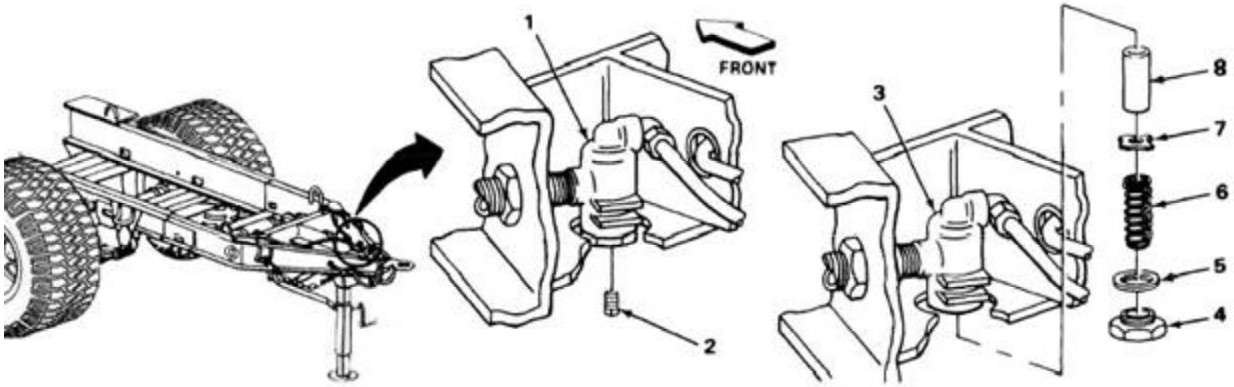

Super Single Style Shown

TA223340

AIR FILTER ASSEMBLY – CONTINUED

LOCATION	ITEM	ACTION **REMARKS**
REMOVAL		
5. Air filter (1)	Air line (2)	Using 7/8-inch open-end wrench, disconnect.
6. Elbow (3)	Airhose (4)	Using 7/8-inch open-end wrench, remove.
7. Fitting (5)	Nut (6)	Using 1 3/8-inch open-end wrench, loosen. **Nut (6) will stay on fitting (5).**
8. Air filter (1)	Fitting (5)	Using 7/8- and 1 1/4-inch open-end wrenches, disconnect and remove air filter (1). **Fitting (5) will stay in chassis.**
INSTALLATION		
9. Air filter (1)	Fitting (5)	Using 1 1/4- and 7/8-inch open-end wrenches, connect.
10. Fitting (5)	Nut (6)	Using 1 3/8-inch open-end wrench, tighten.
11. Elbow (3)	Airhose (4)	Using 7/8-inch open-end wrench, install.
12. Air filter (1)	Airline (2)	Using 7/8-inch open-end wrench, install.

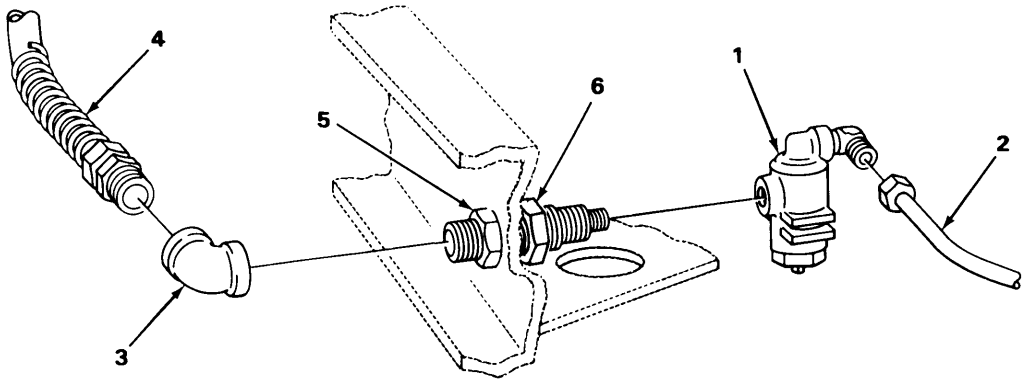

NOTE

FOLLOW-ON MAINTENANCE: Test for leaks (page 4-75).

TASK ENDS HERE

TA223341

AIR CHAMBER

This task covers:

a. Removal (page 4-64)
b. Repair (page 4-65)
c. Installation (page 4-66)
d. Test (page 4-66)

INITIAL SETUP

Tools

Rod, 1/4- by 6-inch
Wrench, open-end, 1/2-inch (two)
Wrench, open-end, 9/16-inch
Wrench, open-end, 5/8-inch

Materials/Parts

Diaphragm

Personnel Required

Two

	LOCATION	ITEM	ACTION **REMARKS**
	REMOVAL		
		WARNING	
	Wear protective goggles to prevent eye injury when opening air reservoir draincock. Move away from airstream.		
1.	Air reservoir (1)	Draincock (2)	Open and release all air pressure.
2.	Air chamber (3)	Line (4)	Using 5/8-inch wrench, disconnect.
3.	Studs (5)	Nuts (6) and washers (7)	Using 9/16-inch wrench, remove.
4.	Mounting bracket (8)	Master cylinder (9) and air chamber (3)	Remove air chamber (3). **Hold master cylinder (9) in place.**
5.		Master cylinder (9)	Support with 1/4-inch rod through mounting bracket (8) and mounting hole in cylinder flange.

AIR CHAMBER - CONTINUED

LOCATION	ITEM	ACTION **REMARKS**

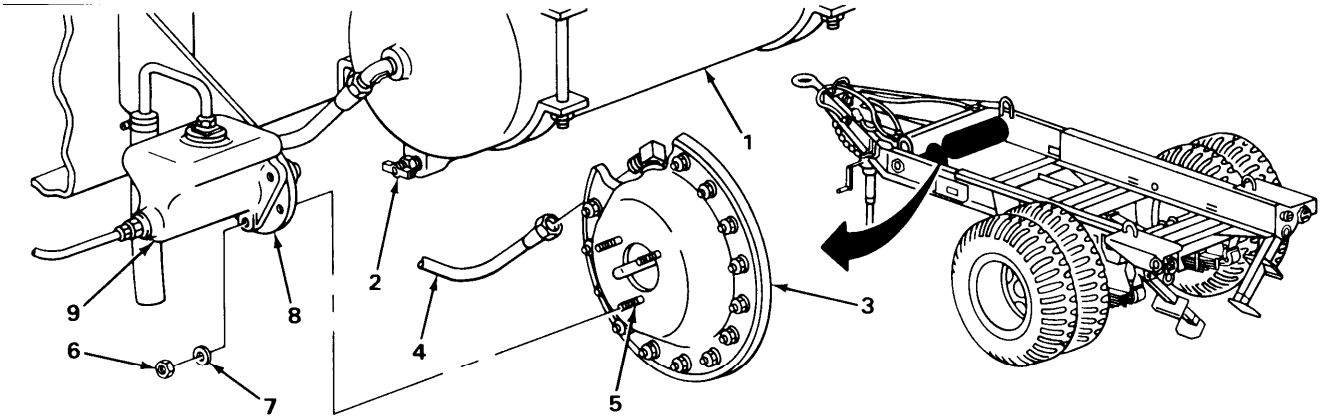

REPAIR

WARNING

The return spring inside of the chamber is under tension. The two halves of the chamber must be clamped together in a vise before removing all of the screws and nuts that hold it together. Failure to do so could cause serious injury to personnel.

6.	Air chamber halves (1 and 2)	Sixteen bolts (3), washers (4), and nuts (5)	a. Using two 1/2-inch wrenches, remove. b. Separate chamber halves (1 and 2).
7.		Diaphragm (6), rod (7), retainer (8), packing (9), and spring (10)	a. Remove. **Discard diaphragm (6).** b. Assemble using new diaphragm (6).
8.		Sixteen bolts (3), washers (4), and nuts (5)	Using two 1/2-inch wrenches, install.

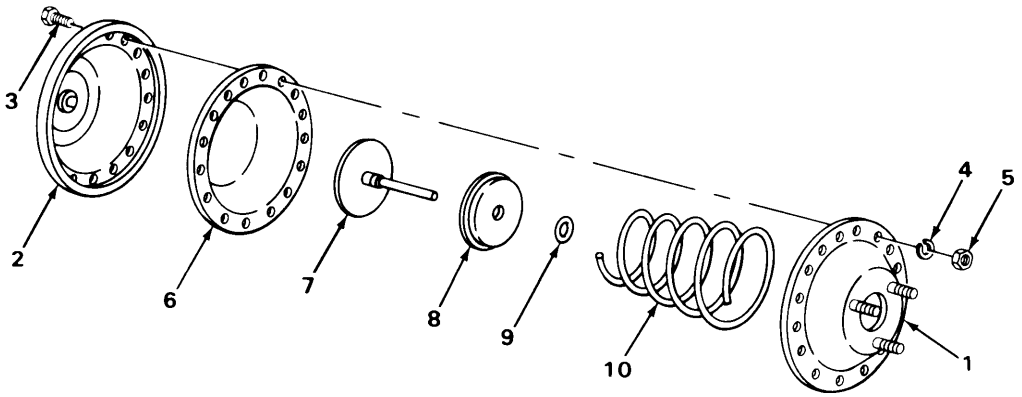

TA223342

AIR CHAMBER - CONTINUED

LOCATION	ITEM	ACTION **REMARKS**
INSTALLATION		
9. Mounting bracket (1)	Master cylinder (2)	Remove 1/4-inch rod and hold master cylinder (2) in place.
10.	Master cylinder (2) and air chamber (3)	Position air chamber studs (4) through bracket (1) and master cylinder mounting holes.
11. Studs (4)	Three nuts (5) and three lockwashers (6)	Using 9/16-inch wrench, install.
12. Air chamber (3)	Line (7)	Using 5/8-inch wrench, install.
13. Air reservoir (8)	Draincock (9)	Close.

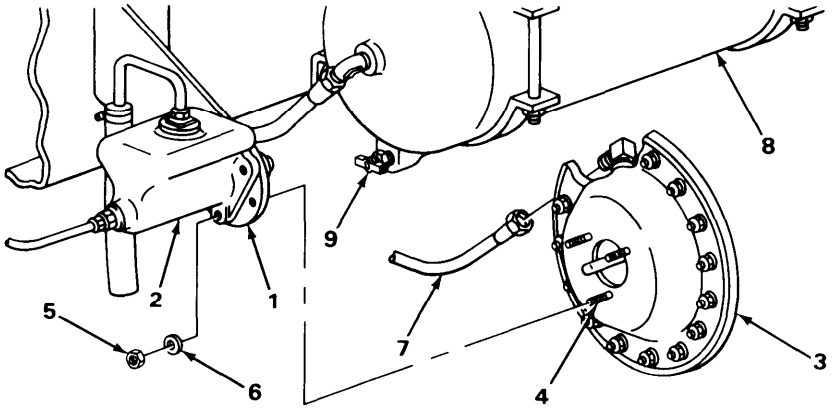

TEST

CAUTION

Excessive push rod travel will result in damage to rubber cup in master cylinder. Insufficient travel will result in ineffective brakes.

NOTE

Push rod travel should be a minimum of 1/2 inch (12.7 millimeters) and a maximum of 7/8 inch (22.2 millimeters) for proper operation.

Trailer must be connected to towing vehicle and air system pressurized to perform test.

TA223343

AIR CHAMBER - CONTINUED

	LOCATION	ITEM	ACTION **REMARKS**
14.	Inspection hole (1)	1/4-inch rod (2)	a. With brakes released, insert through inspection hole (1) until rod (2) stops. b. Mark rod (2) at surface of mounting bracket (3). c. Have assistant apply brakes in towing vehicle. **Rod (2) will be pushed out.** d. Mark rod (2) at surface of mounting bracket (3) again. e. Measure distance between marks. **Distance measured will indicate push rod travel.**

NOTE

If measured distance is not between 1/2 and 7/8 inch (12.7 and 22.2 millimeters), brakes must be adjusted (page 4-46).

Repeat step 14 after brake adjustment.

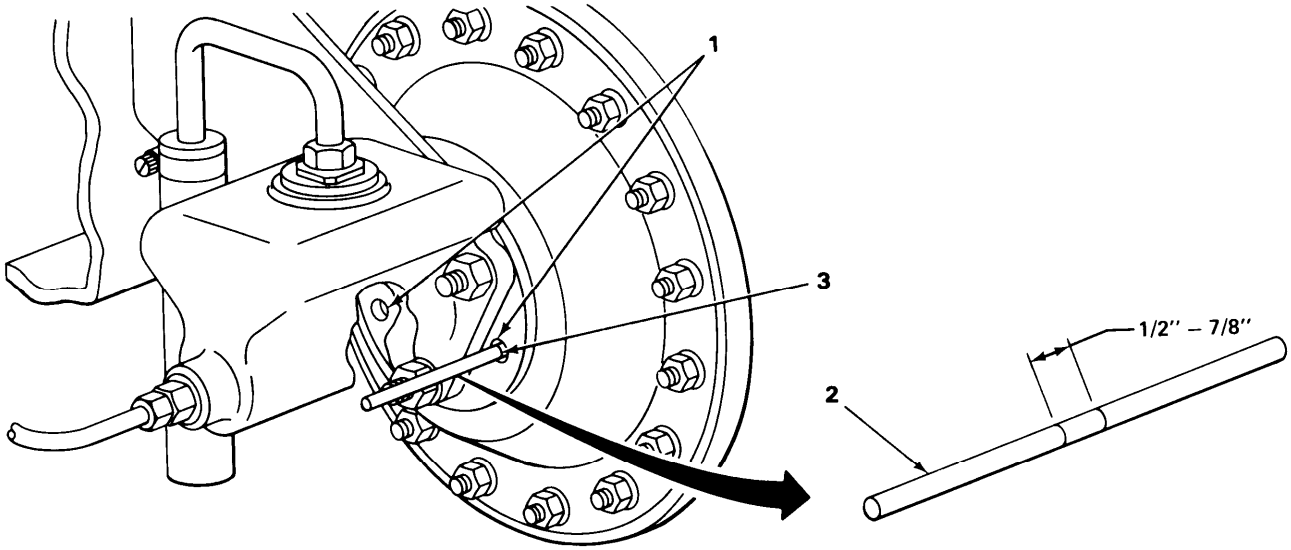

NOTE

FOLLOW-ON MAINTENANCE: Test for leaks (page 4-75).

TASK ENDS HERE

TA223344

AIRBRAKE LINE REPLACEMENT

This task covers:

a. Left air filter to relay valve (page 4-68)
b. Right air filter to relay valve (page 4-69)
c. Relay valve to reservoir (page 4-70)
d. Relay valve to air chamber (page 4-70)

INITIAL SETUP

Tools

Screwdriver, cross-tip
Wrench, 7/16-inch, open-end
Wrench, 5/8-inch, open-end
Wrench, 13/16-inch, open-end
Wrench, 7/8-inch, open-end

Materials/Parts

New lines (as required)

Equipment Condition

Air reservoir draincock opened.

	LOCATION	ITEM	ACTION **REMARKS**
	LEFT AIR FILTER TO RELAY VALVE		
1.	Air filter (1) to line (2)	Fitting (3)	Using 5/8-inch wrench, remove.
2.	Relay valve (4) to line (2)	Fitting (5)	Using 5/8-inch wrench, remove.
3.	Clamp (6) to frame (7)	Screw (8), lock-washer (9), and nut (10)	Using cross-tip screwdriver and 7/16-inch open-end wrench, remove.
4.	Frame (7)	Line (2)	Remove.
5.	Line (2)	Clamp (6)	Remove. **Discard line (2).**
6.	New line (2)	Clamp (6)	Install.
7.	Frame (7)	Line (2)	Install.
8.	Clamp (6) to frame (7)	Screw (8), lock-washer (9), and nut (10)	Using cross-tip screwdriver and 7/16-inch open-end wrench, install.
9.	Relay valve (4) to line (2)	Fitting (5)	Using 5/8-inch open-end wrench, install.

AIRBRAKE LINE REPLACEMENT - CONTINUED

	LOCATION	ITEM	ACTION **REMARKS**
10.	Air filter (1) to line (2)	Fitting (3)	Using 5/8-inch open-end wrench, install.
RIGHT AIR FILTER TO RELAY VALVE			
11.	Air filter (11) to line (12)	Fitting (13)	Using 5/8-inch open-end wrench, remove.
12.	Relay valve (4) to line (12)	Fitting (14)	Using 5/8-inch open-end wrench, remove.
13.	Frame (7) to clamp (15)	Screw (16), lock-washer (17), and nut (18)	Using cross-tip screwdriver and 7/16-inch open-end wrench, remove.
14.	Frame (7)	Grommet (19)	Remove.
15.		Line (12)	Remove.
16.	Line (12)	Clamp (15)	Remove. **Discard line (12).**

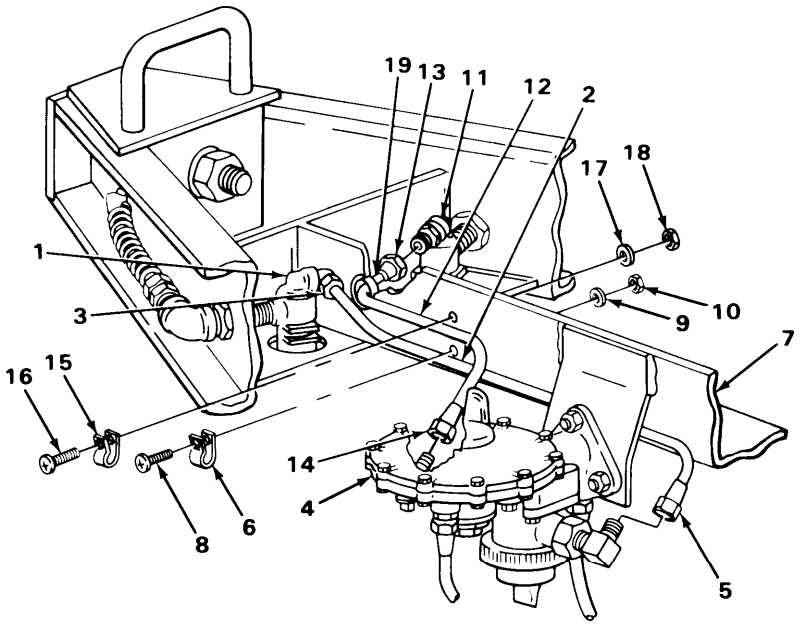

TA223345

AIRBRAKE LINE REPLACEMENT - CONTINUED

	LOCATION	ITEM	ACTION **REMARKS**
RIGHT AIR FILTER TO RELAY VALVE – CONTINUED			
17.	New line (1)	Clamp (2)	Install.
18.	Frame (3)	Line (1) and grommet (4)	Install.
19.	Clamp (2) to frame (3)	Screw (5), lock-washer (6), and nut (7)	Using cross-tip screwdriver and 7/16-inch open-end wrench, install.
20.	Relay valve (8) to line (1)	Fitting (9)	Using 5/8-inch open-end wrench, install.
21.	Air filter (10) to line (1)	Fitting (11)	Using 5/8-inch open-end wrench, install.
RELAY VALVE TO RESERVOIR			
22.	Relay valve (8) to line (12)	Fitting (13)	Using 7/8-inch open-end wrench, remove.
23.	Reservoir (14) to line (12)	Fitting (15)	Using 13/16-inch open-end wrench, remove.
24.	Frame (3)	Line (12)	Remove. **Discard line (12).**
25.		New line (12)	Place in position.
26.	Reservoir (14) to line (12)	Fitting (15)	Using 13/16-inch open-end wrench, install.
27.	Relay valve (8) to line (12)	Fitting (13)	Using 7/8-inch open-end wrench, install.
RELAY VALVE TO AIR CHAMBER			
28.	Relay valve (8) to air line (16)	Fitting (17)	Using 5/8-inch open-end wrench, remove.
29.	Air chamber (18) to line (16)	Fitting (19)	Using 5/8-inch open-end wrench, remove.
30.	Frame (3)	Line (16)	Remove. **Discard line (16).**

AIRBRAKE LINE REPLACEMENT - CONTINUED

	LOCATION	ITEM	ACTION **REMARKS**
31.	Frame (3)	New line (16)	Place in position.
32.	Air chamber (18) to line (16)	Fitting (19)	Using 5/8-inch open-end wrench, install.
33.	Relay valve (8) to line (16)	Fitting (17)	Using 5/8-inch open-end wrench, install.

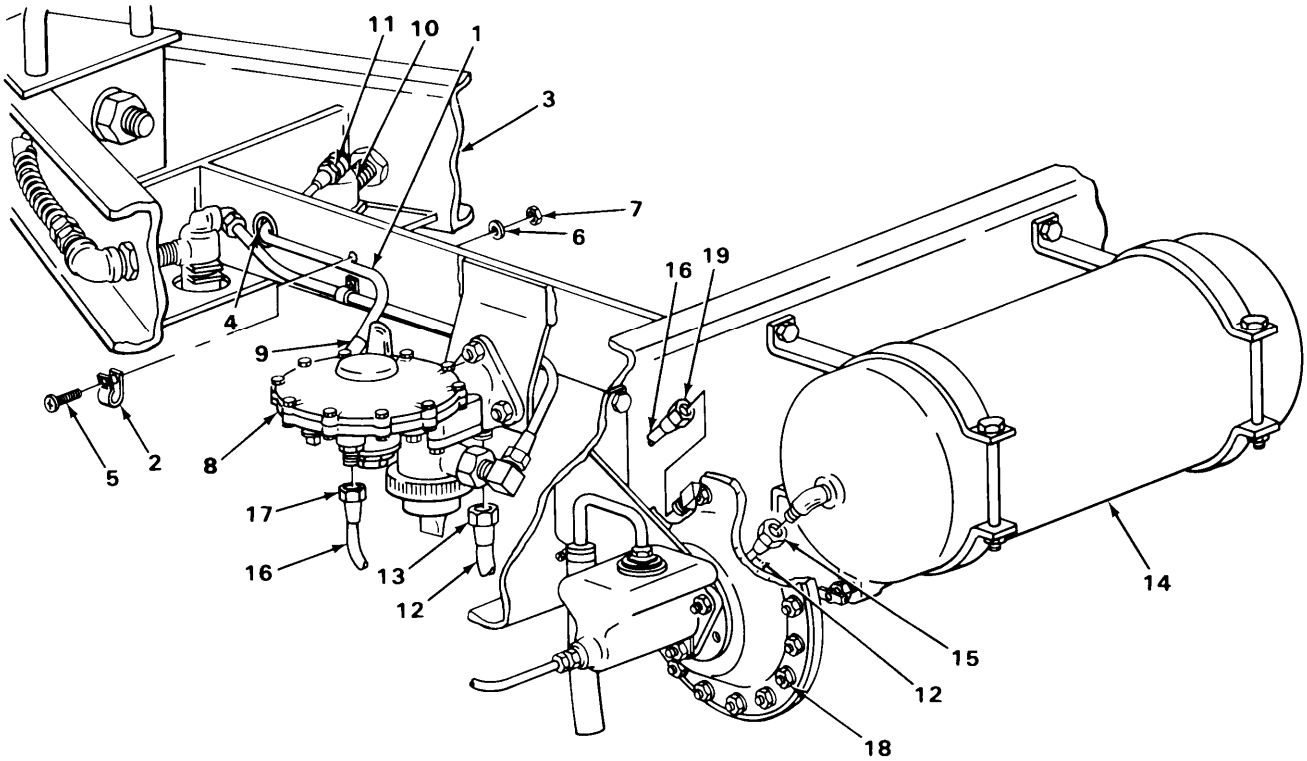

NOTE

FOLLOW-ON MAINTENANCE: Test for leaks (page 4-75).

TASK ENDS HERE

INTERVEHICULAR HOSES

This task covers:

a. Removal (page 4-72)
b. Installation (page 4-72)

INTERVEHICULAR HOSES - CONTINUED

INITIAL SETUP

Tools	Equipment Condition
Wrench, 7/8-inch, open-end	Air coupling quick disconnect removed (page 4-73).

LOCATION	ITEM	ACTION **REMARKS**

REMOVAL

NOTE

This is a typical procedure for the service or the emergency intervehicular hose.

1.	Elbow (1)	Hose (2)	Using 7/8- inch open-end wrench, remove.

INSTALLATION

2.	Elbow (1)	Hose (2)	Using 7/8- inch open-end wrench, install.

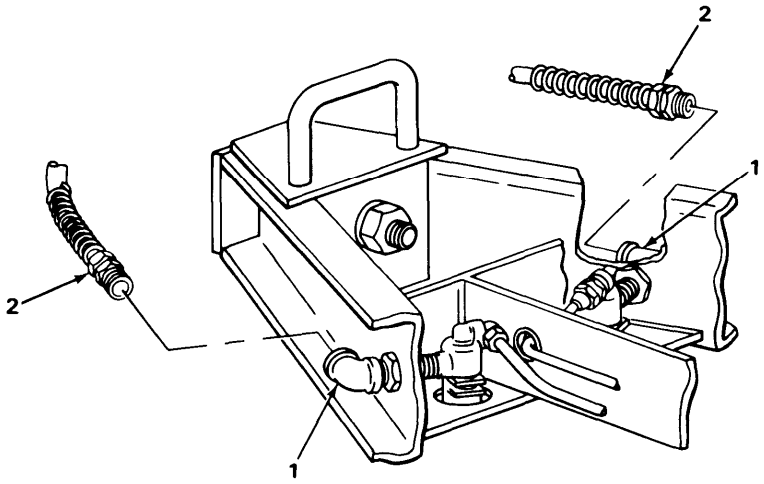

NOTE

FOLLOW-ON-MAINTENANCE:

1. Install air coupling quick disconnect (page 4-73).
2. Test for leaks (page 4-75).

TASK ENDS HERE

TA223347

AIR COUPLING QUICK DISCONNECTS (GLADHANDS)

This task covers:

a. Removal (page 4-73)
b. Installation (page 4-74)

INITIAL SETUP

Tools

Wrench, open-end, 15/16-inch
Wrench, open-end, 1 1/16-inch
Wrench, open-end, 1 1/8-inch

LOCATION	ITEM	ACTION **REMARKS**
REMOVAL		
	NOTE Do steps 1 and 4 when removing an unserviceable gladhand. Do steps 2 and 3 when removing gladhands from an unserviceable hose.	
1. Service or emergency airhose (1)	Gladhand (2)	Remove using 15/16- and 1 1/8-inch wrenches.
2.	Gladhand (2) and body (3)	Using 15/16- and 1 1/16-inch wrenches, remove from hose (1).

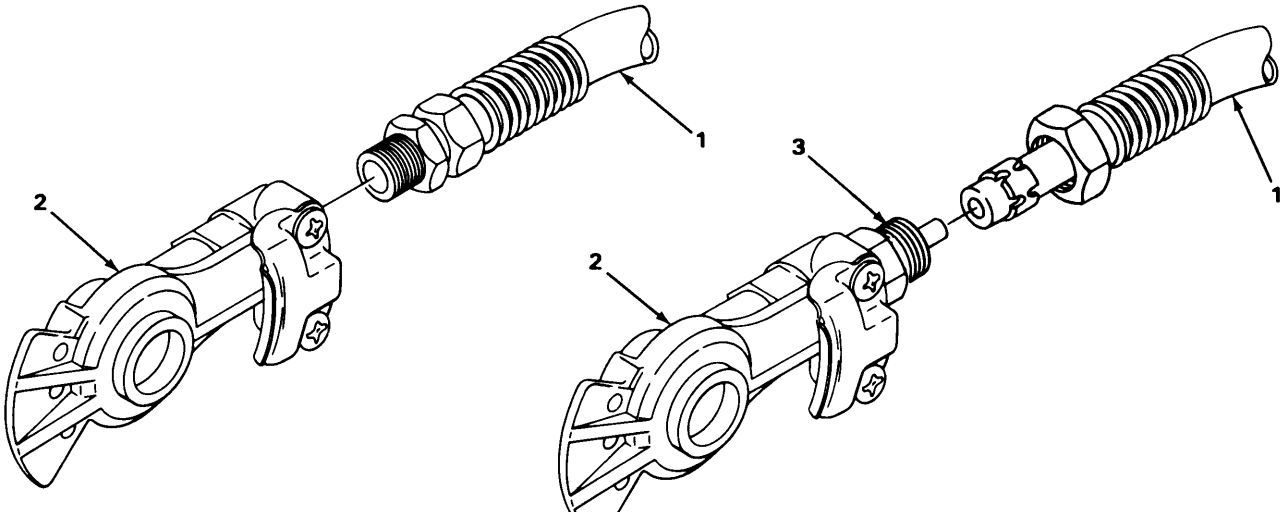

TA223348

AIR COUPLING QUICK DISCONNECTS (GLADHANDS) - CONTINUED

LOCATION	ITEM	ACTION **REMARKS**
INSTALLATION		
3. Service or emergency hose (1)	Gladhand (2), body (3), and sleeve (4)	Using 15/16- and 1 1/16-inch wrenches, install on hose (3).
4.	Gladhand (2)	Using 15/16- and 1 1/8-inch wrenches, install.

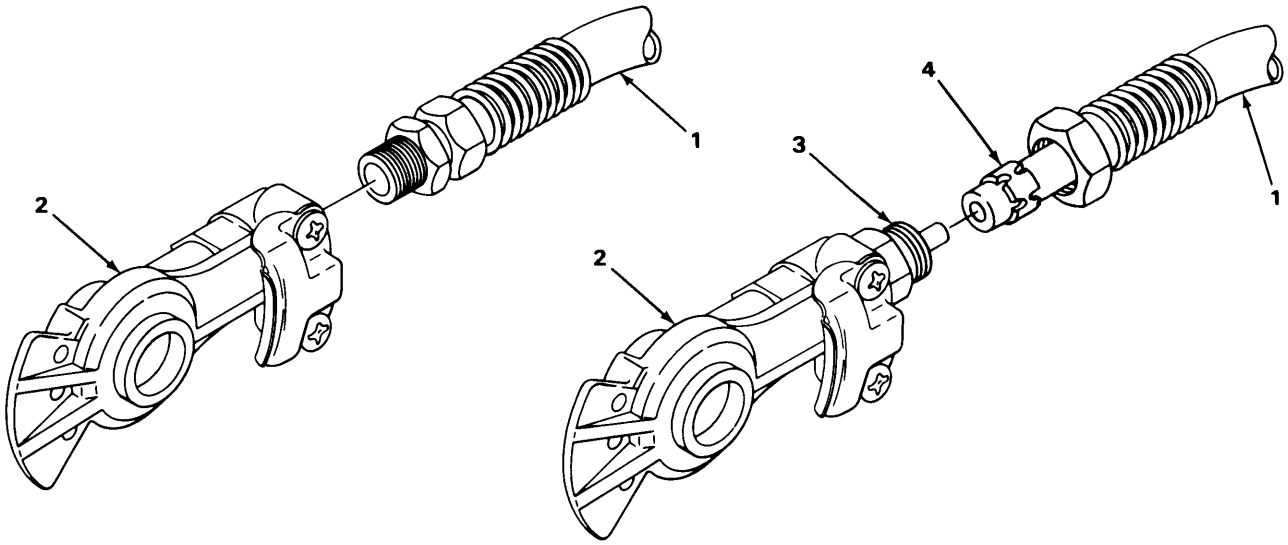

NOTE

FOLLOW-ON MAINTENANCE: Test for leaks (page 4-75).

TASK ENDS HERE

TA224448

AIRBRAKE SYSTEM

This task covers:

Leak testing

INITIAL SETUP

Materials/Parts	Personnel Required
Soap solution (item 9, appendix E) Brush	Two

LOCATION	ITEM	ACTION **REMARKS**

NOTE

The trailer must be coupled to a towing vehicle with its brake system pressurized.

The procedure shown is typical of any area of the system to be tested.

Have an assistant hold the brakes applied while testing to be sure that the area being tested will be pressurized.

Sample component (1)	Fitting (2)	Using brush, apply soap solution and water. **Leaks will be detected by bubbling of the solution.**

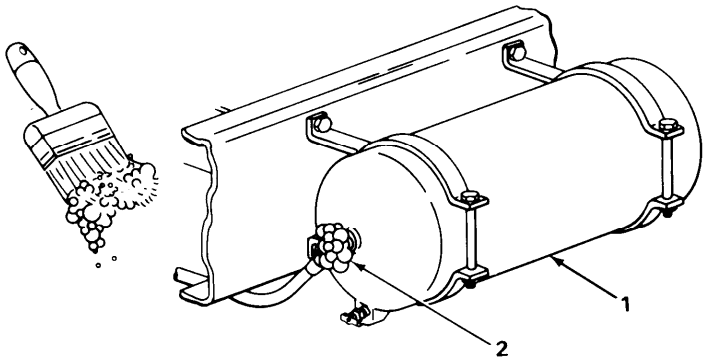

TASK ENDS HERE

TA223349

Section X. WHEEL, TIRE, HUB, AND DRUM

	Page		Page
Hub and Brakedrum	4-76	Wheel and Tire	4-81

HUB AND BRAKEDRUM

This task covers:

a. Removal (page 4-76)
b. Disassembly (page 4-78)
c. Assembly (page 4-78)
d. Installation (page 4-79)
e. Wheel bearing adjustment (page 4-80)

INITIAL SETUP

Tools

Drift, brass
Hammer, ball-peen
Handle, reversible, 3/4-inch square drive
Jack, hydraulic
Jack stand
Screwdriver, flat-tip
Socket, wheel-bearing adjustment
Wrench, box-end, 9/16-inch

Materials/Parts

New bearing cups
New hub gasket

Materials/Parts – Continued

New hub grease seal
New hub studs (as required)
Woodblocks

Equipment Condition

Wheels and tires removed (page 3-5).

References

TM 9-214 – Care and Maintenance of Anti-friction Bearings

LOCATION	ITEM	ACTION **REMARKS**
REMOVAL		
1. Axle (1)	Jack stand (2)	a. Place jack stand (2) under axle (1). b. Lower and remove hydraulic jack (3).

WARNING

All parts of the service brake assembly will be coated with asbestos dust from the brake linings. A filter mask should be worn whenever working on any assembly components. Breathing asbestos dust may cause serious damage to health.

HUB AND BRAKEDRUM -CONTINUED

	LOCATION	ITEM	ACTION **REMARKS**
2.	Hubcap (4)	Three screws (5) and three lockwashers (6)	Using flat-tip screwdriver, remove.
3.	Hub and drum (7)	Hubcap (4) and gasket (8)	Remove. **Discard gasket (8).**
4.	Spindle (9)	Locknut (10) and lockwasher (11)	Using bearing adjustment socket, remove.
5.		Adjusting nut (12)	Using bearing adjustment socket, remove.
6.	Frame rail (13)	Handbrake lever (14)	Release.
7.	Spindle (9)	Hub and drum (7)	Rock back and forth to loosen bearing cone (15).
8.		Bearing cone (15)	Remove.
9.		Hub and drum (7) and spacer (16)	a. Remove hub and drum (7). b. Using hammer and drift, remove spacer (16).

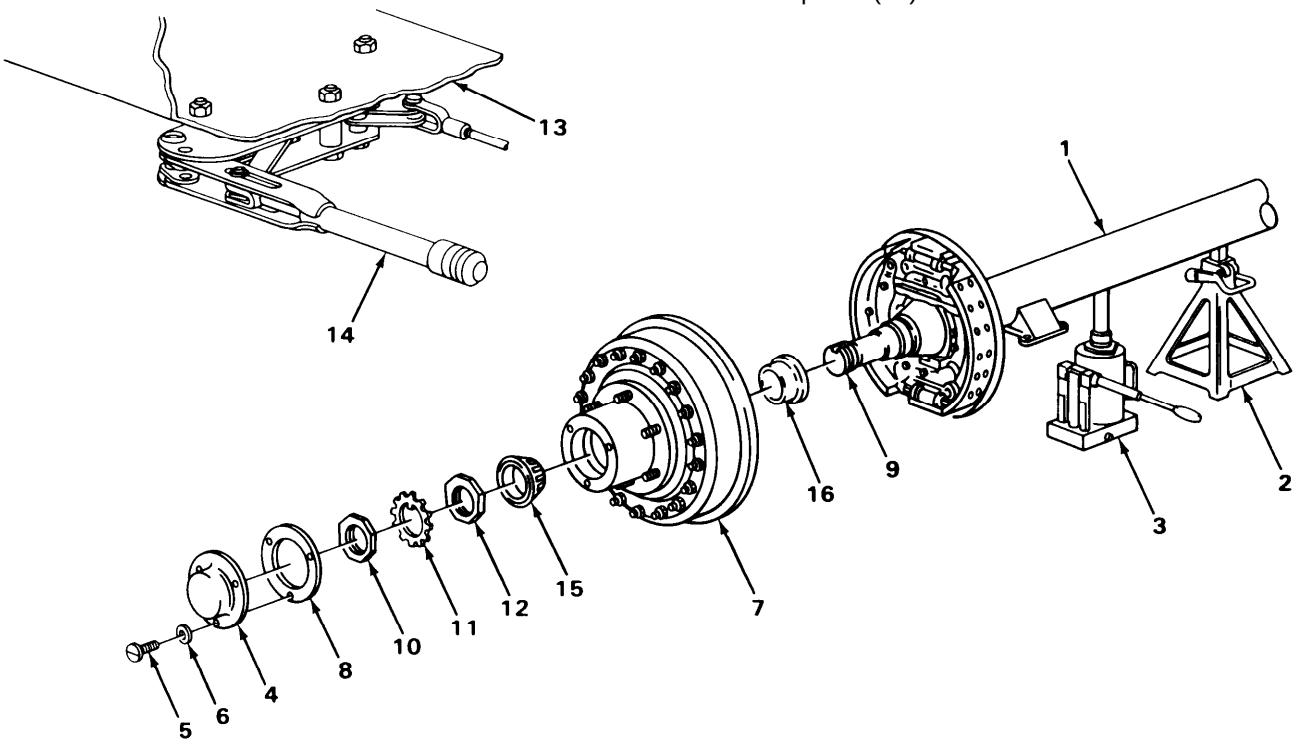

TA223350

HUB AND BRAKEDRUM -CONTINUED

	LOCATION	ITEM	ACTION **REMARKS**
REMOVAL– CONTINUED			
10.	Hub (1)	Bearing cone (2) and seal (3)	Using hammer and drift, remove. **Discard seal (3).**
DISASSEMBLY			
11.	Hub (1)	Six wheel studs (4)	Using hammer and drift, remove.
12.	Drum (5)	Hub (1)	Remove.

NOTE

Drum and drum adapter plate will remain assembled if drum is to be repaired at direct support maintenance.

13.	Drum adapter plate (6)	Sixteen nuts (7) and sixteen lockwashers (8)	Using 9/16-inch box-end wrench, remove.
14.		Sixteen serrated bolts (9)	Using hammer and drift, remove.
15.	Drum (5)	Drum adapter plate (6)	Remove.
16.	Hub (1)	Bearing cups (10 and 11)	Using hammer and drift, remove. **Discard cups (10 and 11).**
ASSEMBLY			
17.	Drum (5)	Drum adapter plate (6)	a. Support adapter plate (6) on two woodblocks. b. Position drum (5) on drum adapter plate (6) and aline mounting holes.
18.		Sixteen serrated bolts (9)	Using drift, install. **Ensure bolts are fully seated.**
19.	Drum adapter plate (6)	Sixteen nuts (7) and sixteen lockwashers (8)	Using 9/16-inch box-end wrench, install.
20.		Hub (1)	a. Support hub (1) on two woodblocks. b. Position drum adapter plate (6) with drum (5) on hub (1) and aline mounting holes.

HUB AND BRAKEDRUM - CONTINUED

	LOCATION	ITEM	ACTION **REMARKS**
21.		Six wheel studs (4)	Using hammer and drift, install.
22.	Hub (1)	Bearing cups (10 and 11)	Using hammer and drift, install.
INSTALLATION			
23.	Hub (1)	Bearing cone (2)	a. Clean and repack in accordance with TM 9-214. b. Install.
24.		New seal (3)	Using hammer and drift, install.

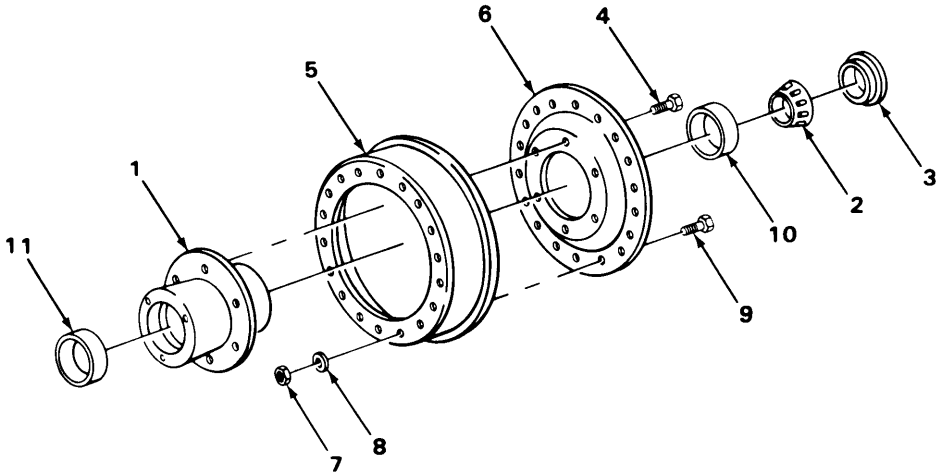

25.	Spindle (12)	Hub and drum (13) and spacer (14)	a. Using hammer and drift, install spacer (14). b. Place hub and drum (13) in position.

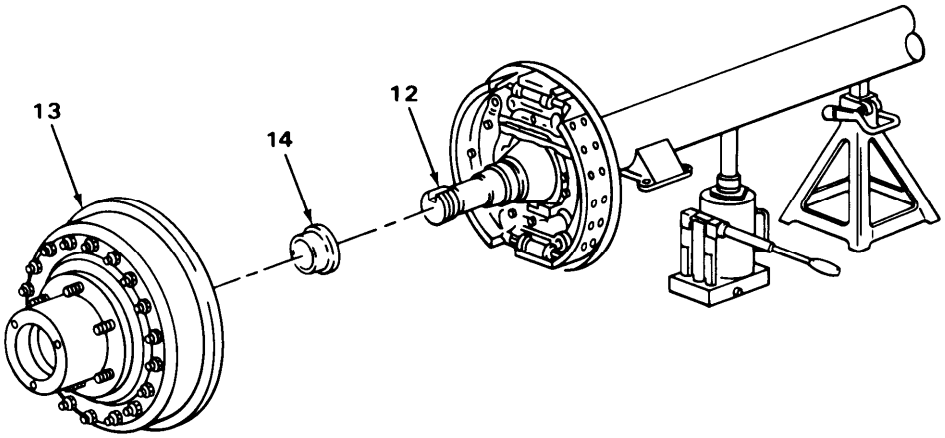

TA223361

HUB AND BRAKEDRUM - CONTINUED

	LOCATION	ITEM	ACTION **REMARKS**
INSTALLATION – CONTINUED			
26.	Spindle (1)	Bearing cone (2)	a. Clean and repack in accordance with TM 9-214. b. Install.
27.		Adjusting nut (3)	Using bearing adjustment socket, install. **Do not tighten.**
WHEEL BEARING ADJUSTMENT			
28.		Adjusting nut (3)	a. Using bearing adjusting socket, tighten until hub and drum (4) just binds. b. Back off approximately one-eighth turn. **Wheels should not rock and should turn freely.**

NOTE

Repeat step 28 if rocking movement is excessive.

29.		Lockwasher (5) and locking nut (6)	Using bearing adjusting socket, install and tighten nut (6).
30.	Hub and drum (4)	Gasket (7), hubcap (8), three lock-washers (9), and three screws (10)	Using flat-tip screwdriver, install.
31.	Axle (11)	Jack (12) and jack stand (13)	a. Raise jack (12) so axle (11) clears jack stand (13). b. Remove jack stand (13).

HUB AND BRAKEDRUM -CONTINUED

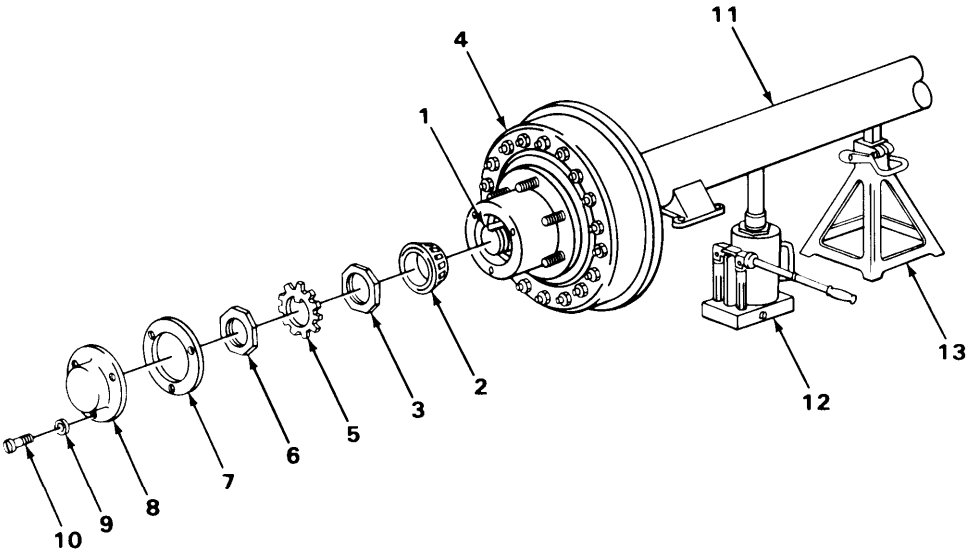

NOTE

FOLLOW-ON MAINTENANCE:

1. Adjust service brake (page 4-46).
2. Install wheel and tire (page 3-6).

TASK ENDS HERE

WHEEL AND TIRE

Wheel and tire maintenance for the M200A1 generator trailer is done in accordance with TM 9-2610-200-24 – Organizational Care, Maintenance, and Repair of Pneumatic Tires, Inner Tubes, and Radial Tires.

TA223352

Section XI. FRAME AND TOWING ATTACHMENT

	Page		Page
Generator Mounting Support Assembly	4-85	Safety Chain	4-86
Landing Leg	4-82	Step Jack	4-86
		Lunette	4-84

LANDING LEG

This task covers:

a. Removal (page 4-82)
b. Installation (page 4-83)

INITIAL SETUP

Tools

Handle, reversible, 3/4-inch square drive
Jack stands (two)
Pliers, diagonal-cutting
Socket, 7/8- by 3/4-inch square drive
Socket, 1 1/2- by 3/4-inch square drive

Tools – Continued

Wrench, open-end, 3/4-inch
Wrench, open-end, 1 5/16-inch

Materials/Parts

Cotter pin

	LOCATION	ITEM	ACTION **REMARKS**
REMOVAL			

WARNING

Do not begin any removal procedures until the trailer chassis is supported firmly, or the landing gear could collapse, causing injury to personnel.

1.	Trailer chassis (1)	Two jack stands (2)	Support chassis (1) with jack stands (2).
2.	Back brace (3) at landing leg (4)	Lockpin (5) and clip (6)	Remove. **Back brace (3) will separate from leg (4).**
3.	Back brace (3) at mounting brackets (7)	Two nuts (8) and two bolts (9)	Using 7/8-inch socket and 3/4-inch wrench, remove.

LANDING LEG - CONTINUED

LOCATION	ITEM	ACTION **REMARKS**
4. Mounting bracket (10)	Cotter pin (11), nut (12), and bolt (13)	Using pliers, 1 5/16-inch wrench, and 1 1/2-inch socket, remove. **Discard cotter pin (11).**
5.	Landing leg (4)	Remove.
INSTALLATION		
6. Mounting bracket (10)	Landing leg (4)	Position in bracket (10).
7.	Bolt (13), nut (12), and cotter pin (11)	Using 1 5/16-inch wrench, 1 1/2-inch socket, and pliers, install.
8. Mounting brackets (7)	Back brace (3)	Position brace (3) in brackets (7).
9.	Two nuts (8) and two bolts (9)	Using 7/8-inch socket and 3/4-inch wrench, install.
10. Landing leg (4)	Back brace (3)	Swing brace (3) up into position.
11. Back brace (3) at landing leg (4)	Lockpin (5) and clip (6)	Install.
12. Chassis (1)	Two jack stands (2)	Extend landing leg (4) and remove jack stands (2).

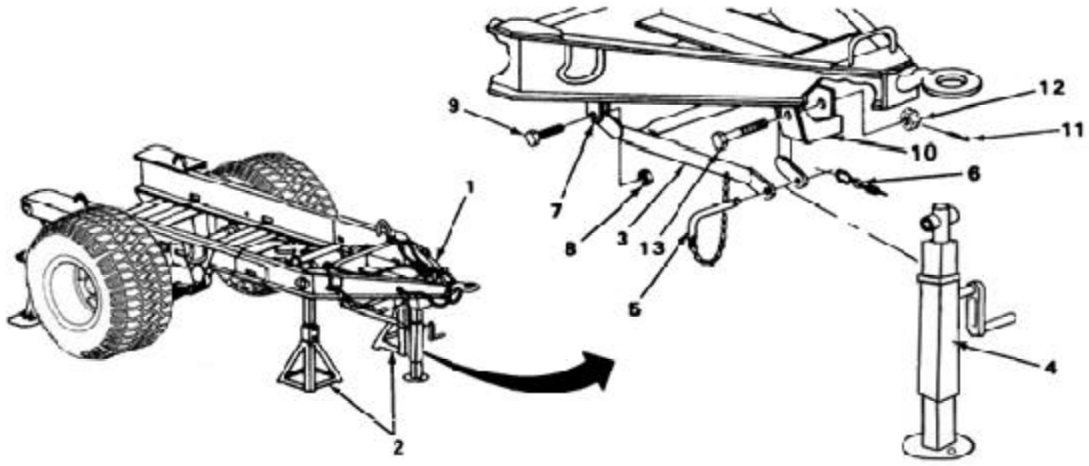

Super Single Style Shown
TASK ENDS HERE

TA223353

LUNETTE

This task covers:

a. Removal (page 4-84)
b. installation (page 4-84)

INITIAL SETUP

Tools	Materials/Parts
Pliers, diagonal-cutting Wrench, open-end, 1 1/2-inch	Cotter pin

LOCATION	ITEM	ACTION **REMARKS**
REMOVAL		
1. Lunette shank (1)	Cotter pin (2), nut (3), and fiat washer (4)	a. Using pliers, remove cotter pin (2). **Discard cotter pin (2).** b. Using 1 1/2-inch open-end wrench, remove nut (3) and washer (4).
2. Chassis (5)	Lunette (6)	Slide out of chassis (5).
INSTALLATION		
3. Chassis (5)	Lunette (6)	Slide into hole in chassis (5). **Position in high or low position as required.**
4. Lunette shank (1)	Flat washer (4), nut (3), and cotter pin (2)	a. Install washer (4) and nut (3) and torque nut to 400-450 lb- ft. b. Install cotter pin (2).

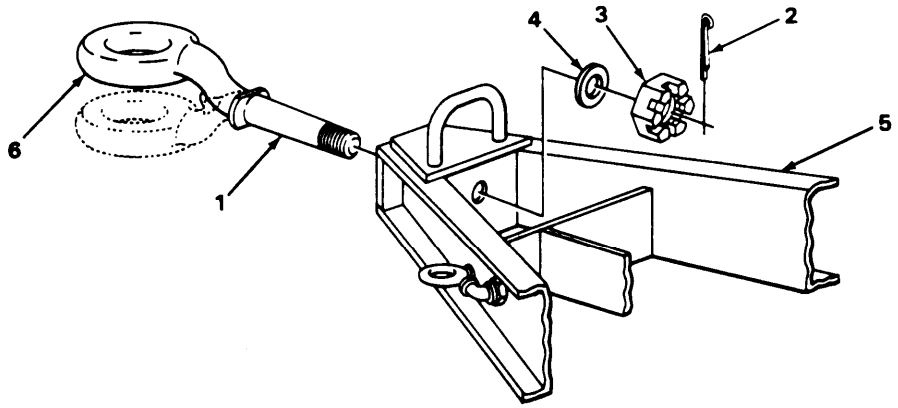

TASK ENDS HERE

TA223354

DELETED

SAFETY CHAIN

This task covers:

a. Removal (page 4-86)
b. Installation (page 4-86)

INITIAL SETUP

Tools

Handle, reversible, 1/2-inch square drive
Socket, 1- by 1/2-inch square drive

LOCATION	ITEM	ACTION	REMARKS
REMOVAL			
1. Frame (1)	Nut (2) and eyebolt (3)	Using socket, remove.	
INSTALLATION			
2. Frame (1)	Eyebolt (3) and nut (2)	Using socket, install.	

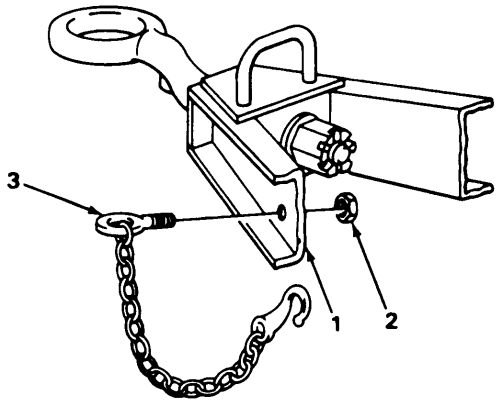

TASK ENDS HERE

STEP JACK

This task covers:

a. Removal (page 4-87)
b. Installation (page 4-87)

TA223356

STEP JACK - CONTINUED

INITIAL SETUP

Tools	Materials/Parts
Pliers, diagonal-cutting Wrench, open-end, 7/8-inch	Cotter pin

	LOCATION	ITEM	ACTION **REMARKS**
REMOVAL			
1.	Bracket (1)	Lockpin (2) and clip (3)	Remove.
2.		Cotter pin (4), nut (5), and bolt (6)	Using pliers and wrench, remove.
INSTALLATION			
3.	Bracket (1)	Step jack (7)	Position in bracket (1).
4.		Bolt (6), nut (5), and cotter pin (4)	Using wrench and pliers, install.
5.		Lockpin (2) and clip (3)	Install.

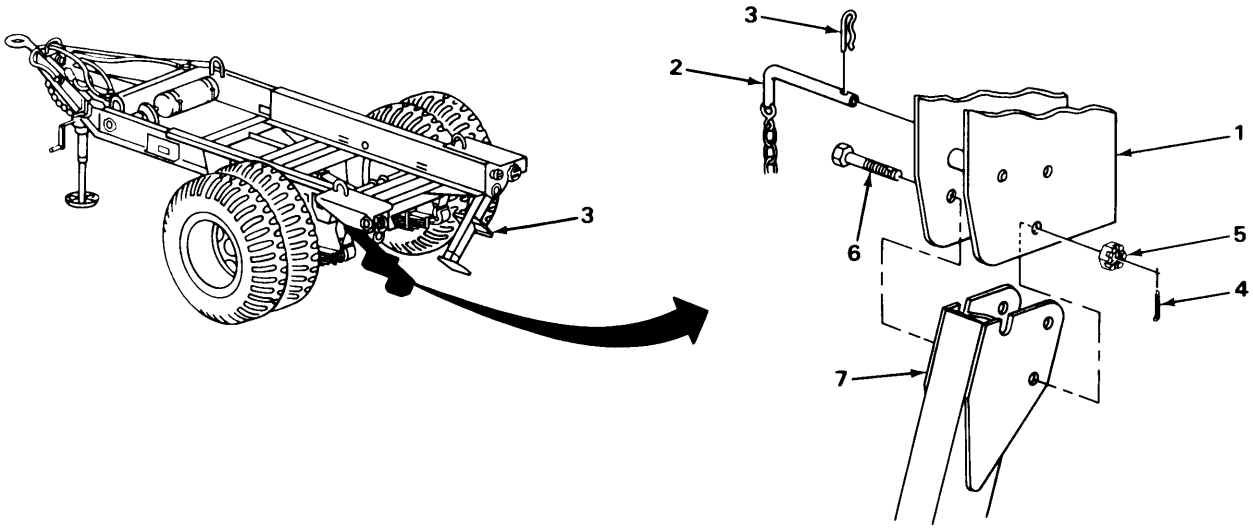

TASK ENDS HERE

TA223357

Section XII. SPRING

	Page		Page
Spring	4-88	Spring Shackle	4-91

SPRING

This task covers:

a. Removal (page 4-88)
b. Installation (page 4-89)

INITIAL SETUP

Tools

Floor jack, hydraulic
Handle, reversible, 1/2-inch square drive
Handle, reversible, 3/4-inch square drive
Jack stands, two large
Jack stands, two small
Mallet, plastic

Tools - Continued

Socket, 1 1/8- by 1/2-inch square drive
Socket, 1 1/4- by 3/4-inch square drive

Personnel Required

Two

LOCATION	ITEM	ACTION **REMARKS**
REMOVAL		
1. Axle (1)	Floor jack (2)	Raise trailer until tires clear ground.
2. Chassis (3)	Two jack stands (4)	Position stands (4) to support trailer.
3. Axle (1)	Floor jack (2)	Lower axle (1) so tires are on ground. **Jack stands (4) will hold weight off springs.**

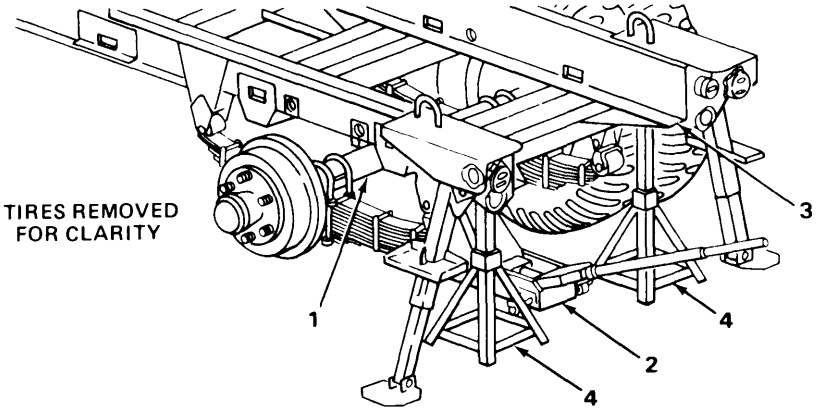

TA223358

SPRING - CONTINUED

	LOCATION	ITEM	ACTION **REMARKS**
4.	U-bolts (5)	Four nuts (6), four washers (7), and plate (8)	Using 1 1/8-inch socket, remove.
5.	Mounting bracket (9)	Nut (10) and bolt (11)	Using 1 1/4-inch socket, remove. **Support spring with jack stand.**
6.	Shackle (12)	Nut (10) and bolt (11)	Using plastic mallet, drive bolts (11) out.
7.		Spring (13)	Remove with assistance.
INSTALLATION			
8.	Axle (1)	Spring (13)	Position spring (13) on ground under axle (1), with assistance.
9.	Shackle (12)	Spring sleeve (14)	Aline spring sleeve (14) with shackle (12).
10.		Bolt (11)	Insert, alining serrations.
11.	Mounting bracket (9)	Spring (13)	Aline spring bushing bracket.
12.		Bolt (11)	Insert.
13.	Two bolts (11)	Two nuts (10)	Using 1 1/4-inch socket, install.

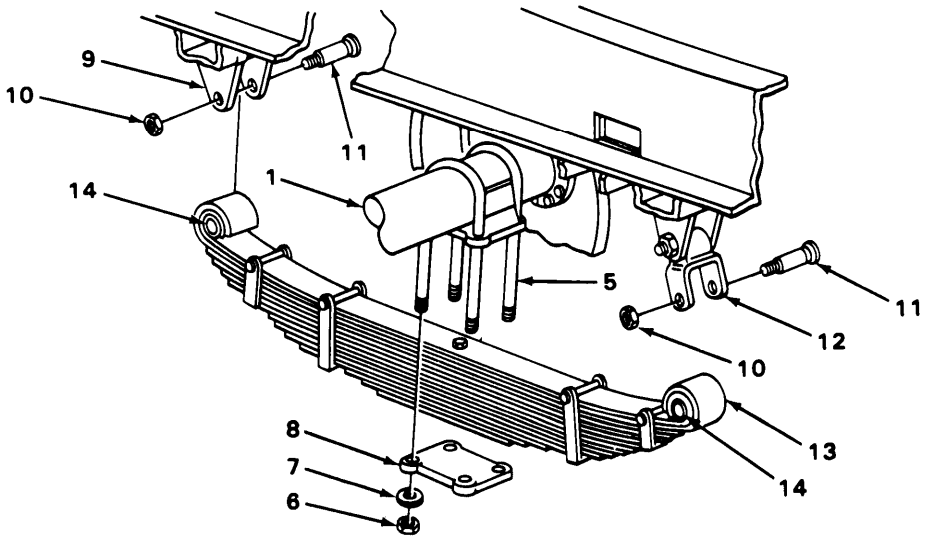

TA223369

SPRING - CONTINUED

LOCATION	ITEM	ACTION **REMARKS**
INSTALLATION – CONTINUED		
14. Axle mount pad (1)	Two U-bol ts (2)	Slip U-bolts (2) over axle and through holes in mount pad (1).
15. U-bolts (2)	Plate (3)	Position plate on U-bolts (2).
16.	Four washers (4) and four nuts (5)	Using 1 1/8-inch socket, install.

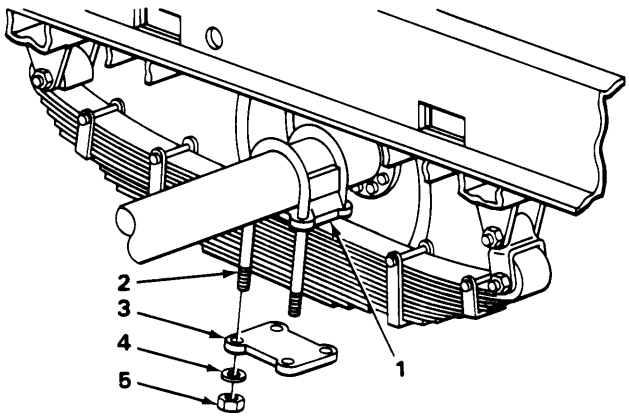

17. Axle (6)	Floor jack (7)	Raise trailer.
18. Chassis (8)	Two jack stands (9)	Remove stands (9).
19. Axle (6)	Floor jack (7)	Lower trailer and remove floor jack (7).

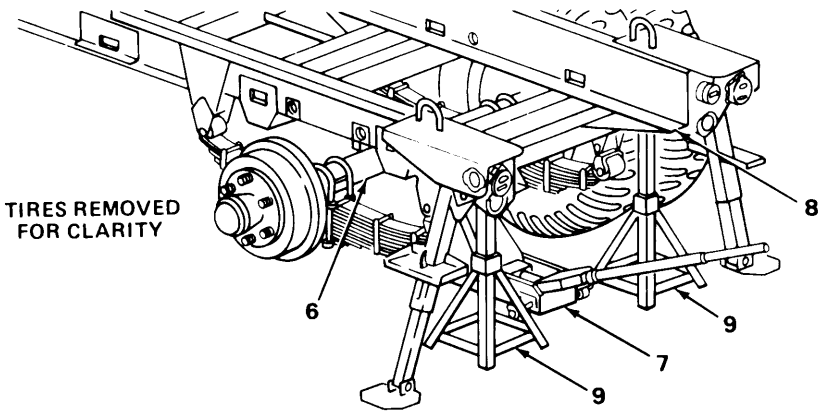

TASK ENDS HERE

TA223360

SPRING SHACKLE

This task covers:

a. Removal (page 4-91)
b. Installation (page 4-92)

INITIAL SETUP

Tools

Handle, reversible, 3/4-inch square drive
Floor jack, hydraulic
Jack stand

Tools - Continued

Mallet, plastic
Socket, 1 1/4- by 3/4-inch

LOCATION	ITEM	ACTION **REMARKS**
REMOVAL		
1. Rear cross-member (1)	Floor jack (2) and jack stand (3)	a. Using jack (2), raise trailer enough to remove weight from wheel. b. Support with jack stand (3).

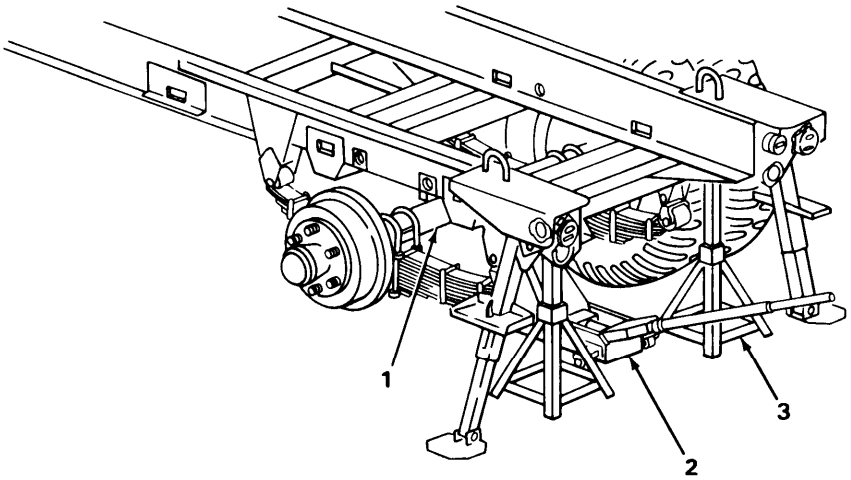

TA223361

SPRING SHACKLE - CONTINUED

	LOCATION	ITEM	ACTION **REMARKS**
REMOVAL – CONTINUED			
2.	Shackle (1) to spring (2)	Nut (3)	Using 1 1/4-inch socket wrench, remove.
3.		Bolt (4)	Using plastic mallet, tap out.
4.	Shackle (1) to bracket (5)	Nut (6)	Using 1 1/4-inch socket wrench, remove.
5.		Bolt (7)	Using plastic mallet, tap out.
6.	Spring (2) to bracket (5)	Shackle (1)	Remove.
INSTALLATION			
7.	Spring (2) to bracket (5)	Shackle (1)	Place in position.
8.	Shackle (1) to bracket (5)	Bolt (7)	Using plastic mallet, tap into place.
9.		Nut (6)	Using 1 1/4-inch socket wrench, install.
10.	Shackle (1) to spring (2)	Bolt (4)	Using plastic mallet, tap into place.
11.		Nut (3)	Using 1 1/4-inch socket wrench, install.
12.	Rear cross-member (8)	Floor jack (9) and jack stand (10)	a. Using jack (9) raise trailer enough to clear jack stand (10). b. Remove jack stand (10) and lower jack (9).

SPRING SHACKLE- CONTINUED

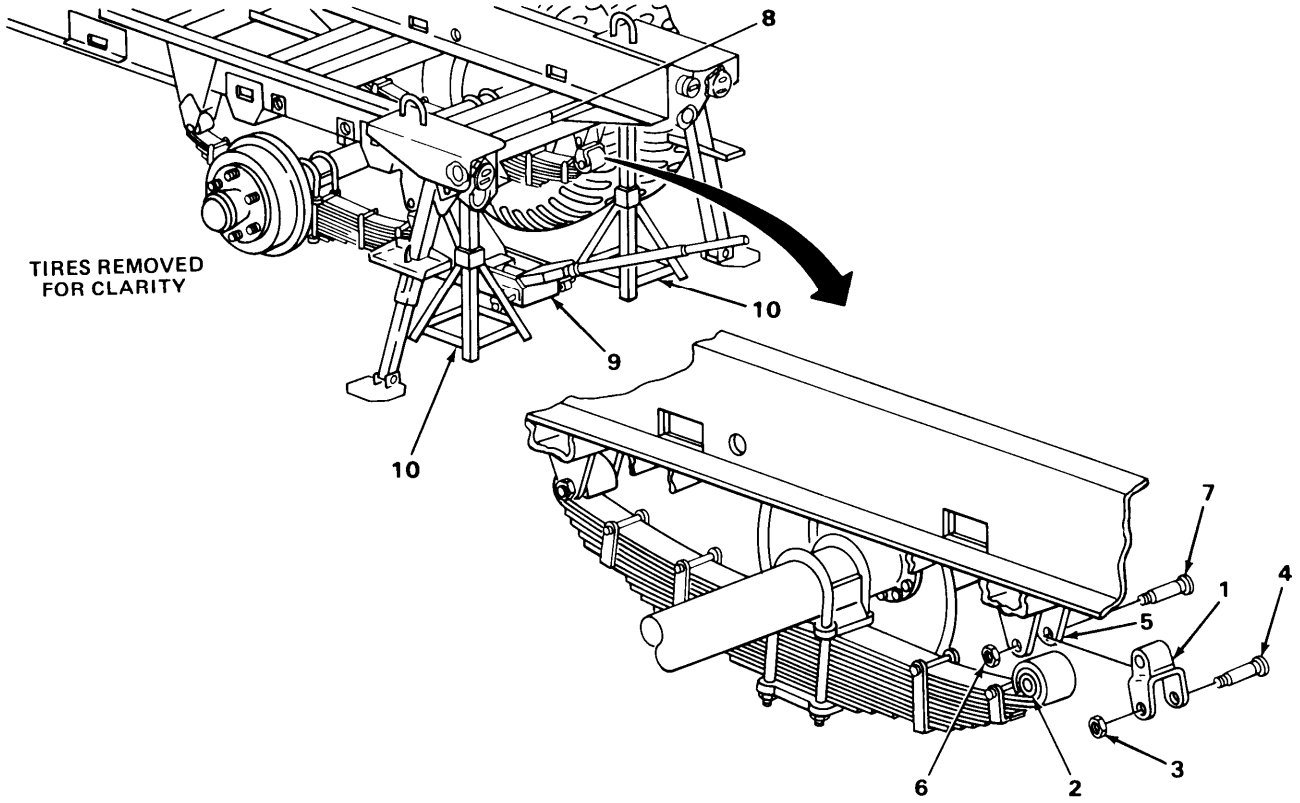

TASK ENDS HERE

Section XIII. BODY ACCESSORY

	Page		Page
Data Plates	4-94	Reflectors	4-95

TA223362

DATA PLATES

This task covers:

a. Removal (page 4-94)
b. Installation (page 4-94)

INITIAL SETUP

Tools

Screwdriver, cross-tip
Wrench, open-end, 7/16-inch

	LOCATION	ITEM	ACTION **REMARKS**
REMOVAL			
1.	Frame (1) at data plate (2)	Four screws (3), four lockwashers (4), and four nuts (5)	Using wrench and screwdriver, remove.
INSTALLATION			
2.	Frame (1)	Data plate (2)	Position on frame (1).
3.		Four screws (3), four lockwashers (4), and four nuts (5)	Using wrench and screwdriver, install.

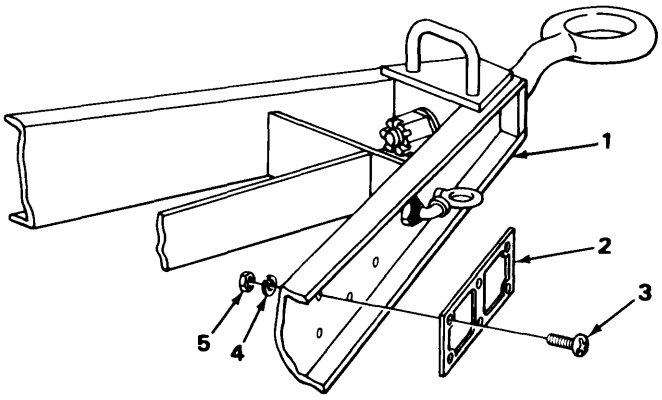

TASK ENDS HERE

TA223363

REFLECTORS

This task covers:

a. Removal (page 4-95)
b. Installation (page 4-95)

INITIAL SETUP

Tools
Screwdriver, cross-tip
Wrench, open-end, 7/16-inch

LOCATION	ITEM	ACTION **REMARKS**
REMOVAL		
1. Frame (1)	Two screws (2), two nuts (3), and reflector (4)	Using screwdriver and wrench, remove.
INSTALLATION		
2. Frame (1)	Reflector (4), two screws (2), and two nuts (3)	Using screwdriver and wrench, install.

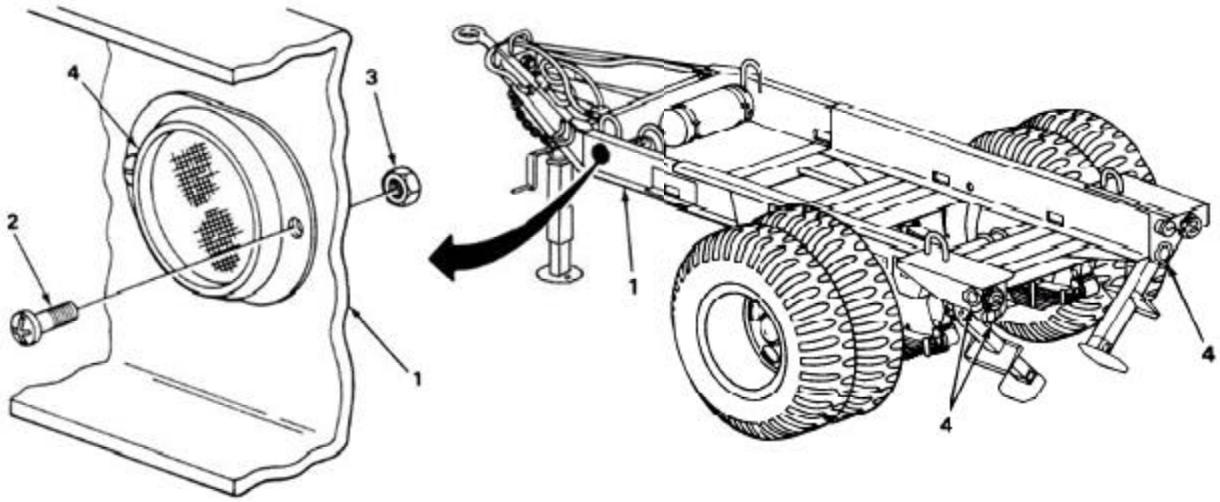

TASK ENDS HERE

TA223364

Section XIV. PREPARATION FOR STORAGE AND SHIPMENT

	Page		Page
Inspection During Storage	4-96	Preservation	4-96
Packing, Shipment, and Storage	4-97		

PRESERVATION

Unit commanders are responsible for the proper care of the trailers.

When a trailer is received and has already been processed for domestic shipment, as indicated on DD Form 1397, the trailer does not have to be reprocessed for storage unless corrosion and deterioration are found during the inspection upon receipt. List on an SF 364 all discrepancies found due to poor preservation, packaging, packing, marking, handling, loading, storage, or excessive preservation. Repairs that cannot be handled by the receiving unit must have tags listing the needed repairs attached. A report of these conditions will be submitted by the unit commander for action by an ordnance maintenance unit.

Trailers to be prepared for administrative storage must be given a technical inspection and processed as described in TM 740-90-1 (Administrative Storage of Equipment). Trailers may be placed in administrative storage for 90 days.

The preferred type of storage for trailers is in a warehouse, or under cover in open sheds, whenever possible.

NOTE

Use TM 55-200, TM 55-601, and TM 743-200-1 as references for processing, storage, and shipment of material with the instructions contained in this section.

INSPECTION DURING STORAGE

Periodically perform a visual inspection on all trailers placed in storage. Remove any corrosion and clean, paint, and treat the area with the prescribed preservative.

NOTE

Touchup painting will be in accordance with TM 43-0139, Painting Instructions for Field Use.

Trailers must be reprocessed in accordance with TM 740-90-1 whenever the administrative storage period expires, if they have not been issued for service or shipped to another unit.

Trailers that have been removed from storage for shipment do not have to be reprocessed if they will reach their destination within the administrative storage period. Reprocess the trailer in accordance with TM 740-90-1 if inspection reveals any corrosion, or if anticipated in-transit weather conditions make it necessary.

INSPECTION DURING STORAGE - CONTINUED

Deprocess trailers that are to be placed in service in accordance with TM 740-90-1. Inspect and service the trailer in accordance with section III, Service Upon Receipt (page 4-5).

Repair or replace all items tagged on inspection prior to preservation.

PACKING, SHIPMENT, AND STORAGE

NOTE

The height and width of the trailer packaging must not exceed the limits of the loading table in TM 55-200 when preparing the trailer for shipment by railroad. Consult the local transportation officer, whenever possible, for limitations of the railroad lines to be used, so that delays, dangerous conditions, and damage to equipment are avoided.

The dual tire style requires an increase in tire pressure to 45 psi (310 kPa) for rail shipment, unless the weather is expected to be hotter than 90°F (32°C) during shipment.

Protect the trailer against corrosion by coating all unpainted surfaces with grease or oil. Lubricants listed in the lubrication chart (page 4-3) may be used for this purpose. Check the trailer for corrosion frequently during shipment and recoat with oil or grease if necessary.

Prepare the trailer for shipment by processing it in accordance with TM 740-90-1.

CHAPTER 5

DIRECT SUPPORT AND GENERAL SUPPORT MAINTENANCE

OVERVIEW

This chapter contains all the maintenance authorized to be performed by direct and general support.

Each maintenance section provides instructions for direct support and general support maintenance personnel. The following initial setup information applies to all procedures.

Resources required are not listed unless they apply to the procedure.

Personnel are listed only if the task requires more than one technician. If Personnel Required is not listed, one technician can do the task.

		Page
Section I.	Repair Parts, Special Tools; Test, Measurement, and Diagnostic Equipment (TMDE); and Support Equipment	5-1
Section II.	Maintenance Procedures	5-1

Section I. REPAIR PARTS, SPECIAL TOOLS; TEST, MEASUREMENT, AND DIAGNOSTIC EQUIPMENT (TMDE); AND SUPPORT EQUIPMENT

	Page		Page
Common Tools and Equipment	5-1	Special Tools, TMDE, and Support Equipment	5-1
Repair Parts	5-1		

COMMON TOOLS AND EQUIPMENT

Refer to the Modified Table of Organization and Equipment (MTOE) for authorized common tools and equipment applicable to your unit.

SPECIAL TOOLS, TMDE, AND SUPPORT EQUIPMENT

There are no special tools, TMDE, or support equipment required to maintain the trailer.

REPAIR PARTS

Repair parts are listed and illustrated in appendix F of this manual.

Section II. MAINTENANCE PROCEDURES

	Page		Page
Brakeshoe Repair	5-2	Landing Leg Repair	5-7
Brakedrum Repair	5-3	Step Jack Repair	5-5
Frame Repair	5-5	Tire Repair	5-5

BRAKESHOE REPAIR

This task covers:

a. Disassembly (page 5-2)
b. Cleaning (page 5-2)
c. Inspection (page 5-2)
d. Assembly (page 5-3)

INITIAL SETUP

Tools

Reliner, brake and clutch

Materials/Parts

Linings, 4 each
Rivets, 56 each

Equipment Condition

Brakeshoes removed (page 4-41).

LOCATION	ITEM	ACTION **REMARKS**

WARNING

All parts of the service brake will be coated with asbestos dust from the brake linings. A filter mask should be worn whenever working on any assembly components. Breathing asbestos dust can cause serious damage to health.

DISASSEMBLY

1.	Brakeshoes (1)	Lining (2) and 14 rivets (3)	Using brake reliner, remove. **Discard rivets (3) and linings (2).**

CLEANING

2.		Shoe (4)	Clean in accordance with cleaning instructions (page 4-14).

INSPECTION

3.		Shoe (4)	Inspect for cracks and distortion.
4.	Shoe (4)	Fourteen holes (5)	Inspect for excessive wear. **Discard bad shoes (4).**

BRAKESHOE REPAIR - CONTINUED

LOCATION	ITEM	ACTION	**REMARKS**
ASSEMBLY			
5. Shoe (4)	Lining (2) and 14 rivets (3)	Assemble using brake reliner.	**Refer to manufacturer's operating instructions.**

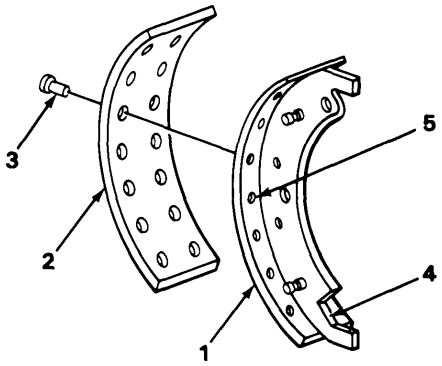

TASK ENDS HERE

BRAKEDRUM REPAIR

This task covers:

a. Cleaning (page 5-4)
b. Inspection (page 5-4)
c. Repair (page 5-4)

INITIAL SETUP

Tools

Inside micrometer with extension

Equipment Condition

Wheel hub and brakedrum removed (page 4-76).
Wheel hub and brakedrum disassembled (page 4-78) as required.

TA223365

BRAKEDRUM REPAIR - CONTINUED

LOCATION	ITEM	ACTION **REMARKS**

WARNING

All parts of the service brake assembly will be coated with asbestos dust from the brake linings. A filter mask should be worn whenever working on any assembly components. Breathing asbestos dust can cause serious damage to health.

CLEANING

1.	Brakedrum (1)	Clean in accordance with cleaning instructions (page 4-14).

INSPECTION

2.	Braking surface (2)	a. Inspect for warpage, cracks, checking, or scoring. **Discard drum if cracked or scoring is deeper than 1/16 inch (1.59 mini. meters).** b. Check diameter of drum at four locations 45 degrees apart using inside micrometer. **Discard drum if out-of-round requiring removal of more than 1/16 inch (1.59 millimeters) of metal.**

REPAIR

3.	Braking surface (2)	Reface braking surface using brake lathe. **Remove a maximum of 0.01 inch (0.254 millimeter) per cut.** **Discard if inside diameter exceeds 15.23 inches (38.68 centimeters).**

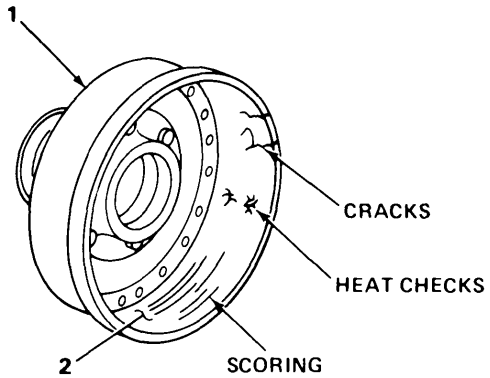

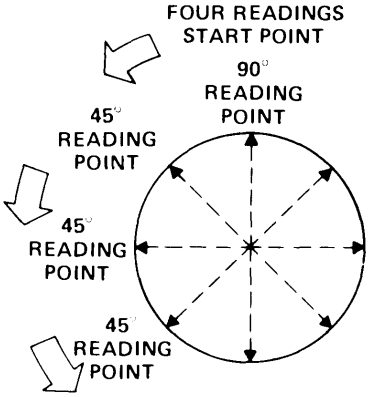

TASK ENDS HERE

TA223366

FRAME REPAIR

Repair of the frame will be accomplished in accordance with TB 9-2300-247-40, Tactical Wheeled Vehicles: Repair of Frames.

TIRE REPAIR

Repair of tires will be accomplished in accordance with TM 9-2610-200-24, Organizational Care, Maintenance, and Repair of Pneumatic Tires Inner Tubes, and Radial Tires.

STEP JACK REPAIR

This task covers:

a. Disassembly (page 5-5)
b. Assembly (page 5-6)

INITIAL SETUP

Tools

Handle, reversible, 3/8-inch square drive
Pliers, diagonal-cutting
Screwdriver, flat-tip
Socket, 5/8- by 3/8-inch square drive

Tools – Continued

Wrench, open-end, 5/8-inch

Equipment Condition

Step jack fully retracted and removed.

LOCATION	ITEM	ACTION	REMARKS
DISASSEMBLY			
1. Latch (1)	Two screws (2)	Using screwdriver, remove.	
2. Step (3)	Latch (1)	Remove.	

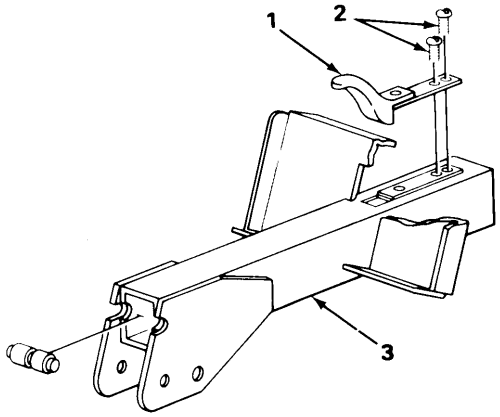

TA223367

STEP JACK REPAIR - CONTINUED

LOCATION	ITEM	ACTION **REMARKS**
DISASSEMBLY – CONTINUED		
3. Retaining pin (1)	Tension spring (2)	Using screwdriver, remove.
4. Step (3)	Pin (1)	Remove.
5. Pad (4)	Nut (5), bolt (6), and cotter pin (7)	Using pliers, wrench, and socket, remove.
6. Step (3)	Tension spring (2)	Remove.
ASSEMBLY		
7. Tube (8)	Tension spring (2)	Insert hooked end into bottom (9).
8. Tube (8) and tension spring (2)	Pad (4)	Aline.
9. Pad (4)	Nut (5), bolt (6), and cotter pin (7)	Using socket, wrench, and pliers, install.
10. Step (3)	Tube (8)	Insert and aline holes (10) with latch hole(11).
11.	Pin (1)	Position in notch (12).
12. Pin (1)	Spring (2)	Hook over pin (1).
13. Step (3)	Latch (13)	Position over mounting holes.
14. Latch (13)	Two screws (14)	Using screwdriver, install.

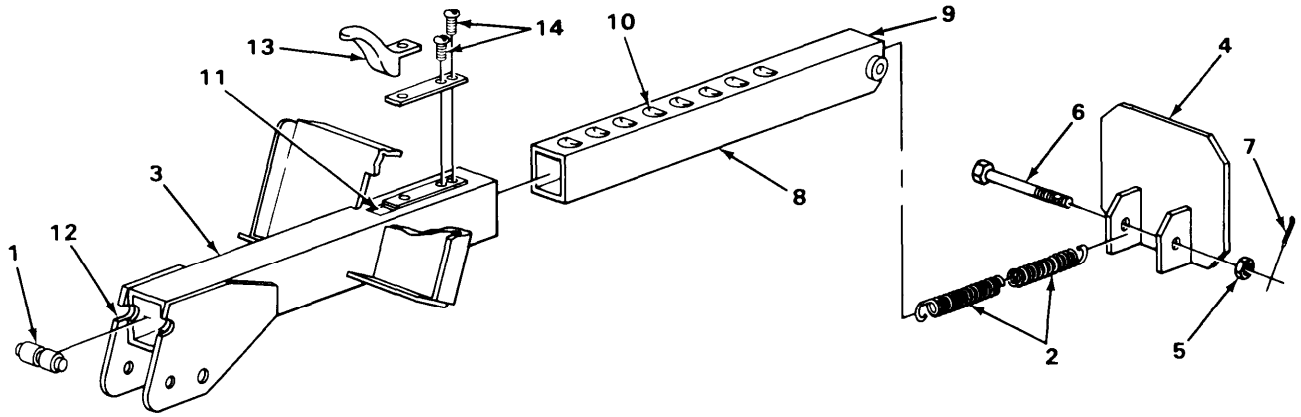

TASK ENDS HERE

TA223368

LANDING LEG REPAIR

This task covers:

a. Disassembly (page 5-7)
b. Assembly (page 5-9)

INITIAL SETUP

Tools

Hammer, ball-peen
Handle, reversible, 3/8-inch square drive
Punch
Socket, 1/2- by 3/8-inch square drive
Wrench, open-end, 15/16-inch

Tools – Continued

Wrench, pipe
Wrench, socket-head, 5/16-inch

Equipment Condition

Landing leg removed (page 4-82).

LOCATION	ITEM	ACTION	REMARKS

NOTE

Fully extend landing leg by turning crank handle counterclockwise.

DISASSEMBLY

1.	Tube upper (1)	Four capscrews (2) and four lock-washers (3)	Using 1/2-inch socket wrench, remove.
2.	Housing (4)	Tube upper (1)	Remove.

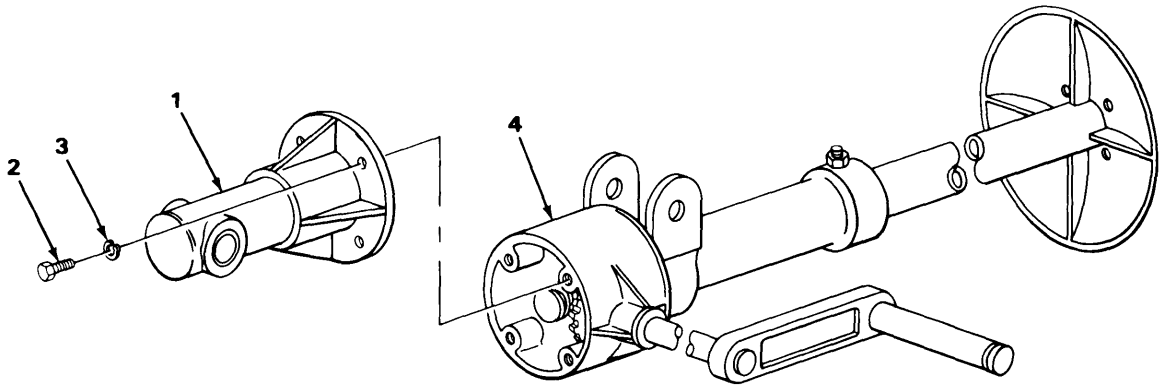

TA223369

LANDING LEG REPAIR - CONTINUED

	LOCATION	ITEM	ACTION **REMARKS**
DISASSEMBLY – CONTINUED			
3.	Tube lower (1)	Nut (2) and setscrew (3)	Using 15/16-inch open-end wrench and 5/16-inch socket-head wrench, remove.
4.		Shoe assembly (4)	Remove by turning counterclockwise.
5.	Shoe (4)	Pin (5)	Using hammer and punch, remove.
6.		Screw shaft (6)	Remove.
7.	Housing (7)	Tube lower (1)	Using pipe wrench, remove,

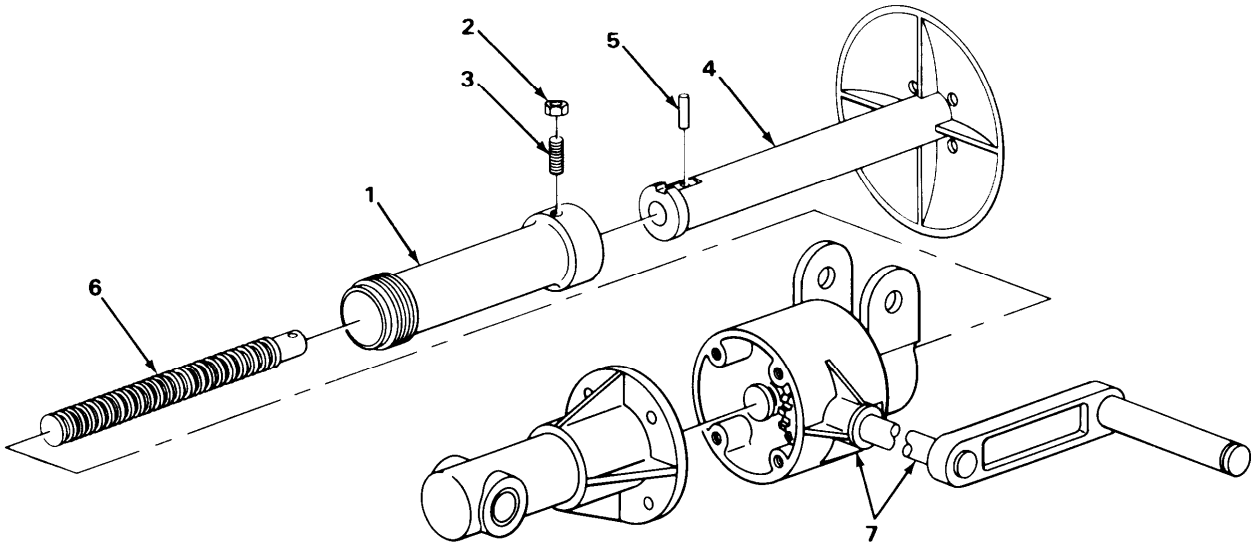

8.	Housing (7)	Locknut (8) and lockwasher (9)	Using hammer and punch, remove.
9.	Bevel gear (10)	Pin(n)	Using hammer and punch, remove,
10.	Housing (7)	Crank (12) and bevel gear (10)	Remove.
11.		Bevel gear (13) and bearing (14)	Remove.

TA223370

LANDING LEG REPAIR - CONTINUED

	LOCATION	ITEM	ACTION **REMARKS**
12.	Crank (12)	Spacer (15) and washer (16)	Remove.
ASSEMBLY			
13.	Housing (7)	Bevel gear (13) and bearing (14)	Install.
14.	Crank (12)	Spacer (15) and washer (16)	Install.
15.	Housing (7)	Crank (12) and bevel gear (10)	Install and aline pinhole.
16.	Bevel gear (10)	Pin (11)	Using hammer and punch, install.
17.	Housing (7)	Lockwasher (8) and locknut (9)	Using hammer and punch, install while holding crank handle (12).

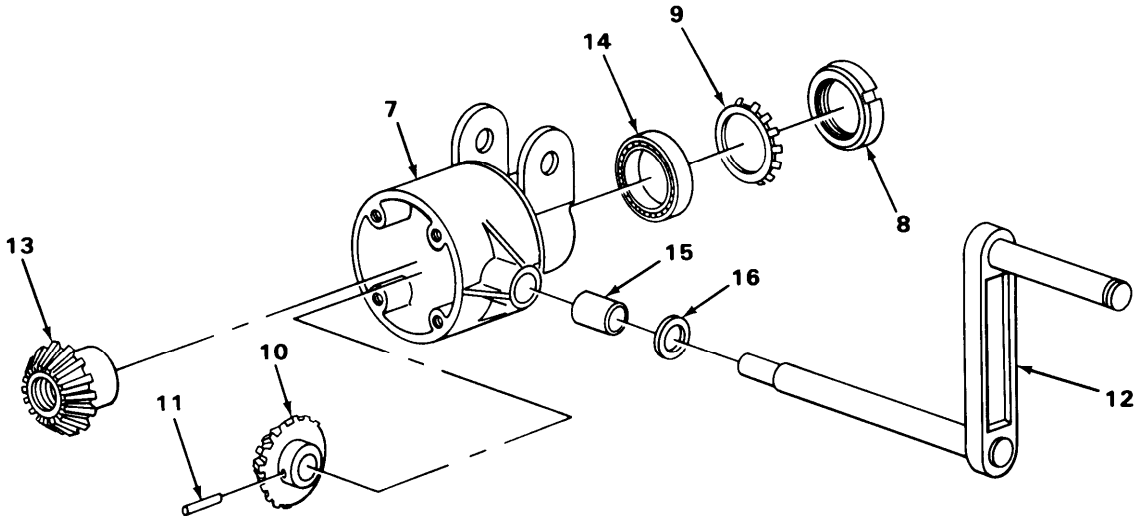

TA223371

LANDING LEG REPAIR - CONTINUED

LOCATION	ITEM	ACTION **REMARKS**
ASSEMBLY – CONTINUED		
18. Housing (1)	Screw shaft (2)	Install.
19. Shoe (3)	Tube lower (4)	Slide over shoe (3) with threaded end up.
20. Screw shaft (2)	Shoe (3)	Position by alining pinhole.
21. Shoe (3)	Pin (5)	Using punch, install.
22. Housing (1)	Tube lower (4)	Using pipe wrench, install.
23. Tube lower (4)	Shoe (3)	Aline slot in shoe assembly (3) with setscrew hole in tube.
24.	Setscrew (6) and nut (7)	a. Install setscrew (6). **Setscrew (6) should not interfere with extend and retract operation.** b. Install nut locking setscrew (6) in position.

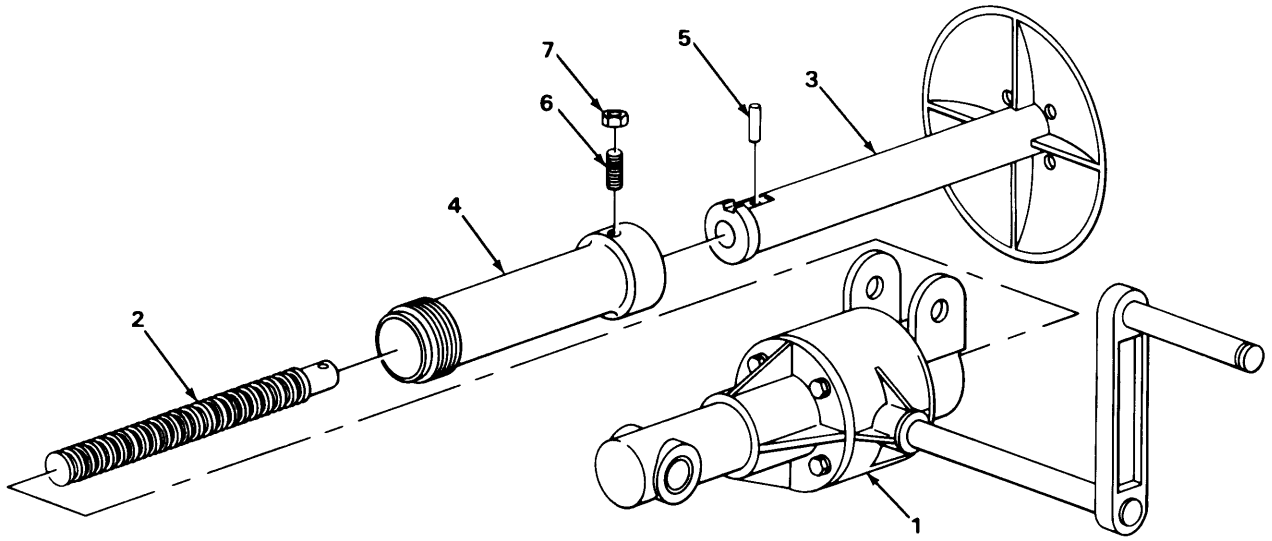

TA223372

LANDING LEG REPAIR - CONTINUED

	LOCATION	ITEM	ACTION **REMARKS**
25.	Housing (1)	Cavity (8)	Lubricate in accordance with lubrication chart (page 4-3).
26.		Tube upper (9)	Position by aiming mounting holes.
27.	Tube upper (9)	Four capscrews (10) and four lock-washers (11)	Using 1/2-inch socket wrench, install.

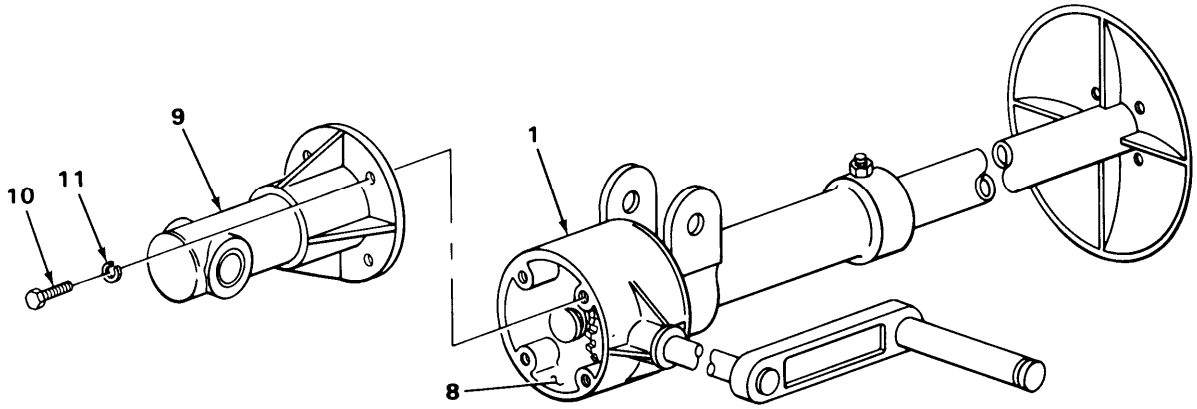

TASK ENDS HERE

TA223373

APPENDIX A

REFERENCES

A-1. SCOPE.

This appendix lists all forms, field manuals, technics manuals, and miscellaneous publications referenced in this manual.

A-2. PUBLICATION INDEXES.

The following indexes should be consulted frequently for latest changes or revisions and for new publications relating to material covered in this manual.

Index of Army Motion Pictures and Related Audio Visual Aids	DA PAM 108-1
Consolidated Index of Army Publications and Blank Forms	DA PAM 310-1

A-3. FORMS.

Recommended Changes to DA Publications	DA Form 2028
Equipment Inspection and Maintenance Worksheet	DA Form 2404
Maintenance Request	DA Form 2407
Equipment Daily or Monthly Log	DA Form 2408-1
Equipment Transfer Report	DA Form 2408-7
Equipment Acceptance and Registration Record	DA Form 2408-8
Uncorrected Fault Record	DA Form 2408-14
Equipment Maintenance Log (Consolidated)	DA Form 2409
Preventive Maintenance Schedule and Record	DD Form 314
Accident Identification Card	DD Form 518
Processing and Reprocessing Report for Shipment, Storage, and Issue of Vehicles and Spare Engines	DD Form 1397
Vehicle Accident Report	SF 91
Report of Discrepancy	SF 364
Quality Deficiency Report	SF 368

A-4. FIELD MANUALS.

Camouflage, Basic Principles, and Field Camouflage	FM 5-20
Explosives and Demolitions	FM 5-25
Operation and Maintenance of Ordnance Material in Cold Weather (0° to -65°F)	FM 9-207
Manual for the Wheeled Vehicle Driver	FM 21-305
Cold Weather Operations	FM 31-70

A-5. TECHNICAL MANUALS.

Inspection, Care, and Maintenance of Antifriction Bearings	TM 9-214
Welding Theory and Application, Operators Manual	TM 9-237
Deepwater Fording of Ordnance Material	TM 9-238
Materials Used for Cleaning, Preserving, Abrading, and Cementing Ordnance Materiel and Related Materials Including Chemicals	TM 9-247
Organizational Care, Maintenance, and Repair of Pneumatic Tires, Inner Tubes, and Radial Tires	TM 9-2610-200-24

A-5. TECHNICAL MANUALS - CONTINUED.

The Army Maintenance Management System (TAMMS)	TM 38-750
Painting Instructions for Field Use	TM 43-0139
Railway Operating and Safety Rules	TM 55-200
Railcar Loading Procedures	TM 55-601
Administrative Storage of Equipment	TM 740-90-1
Railway Operating Rules	TM 743-200-1
Procedures for Destruction of Tank-Automotive Equipment to Prevent Enemy Use (US Army Tank-Automotive Command)	TM 750-244-6

A-6. TECHNICAL BULLETINS.

Tactical Wheeled Vehicles: Repair of Frames	TB 9-2300-247-40
Standards for Oversea Shipment or Domestic Issue of Combat, Tactical, and Special Purpose Vehicles	TB 9-2300-281-35
Color Marking and Camouflage Painting of Military Vehicles	TB 43-0209

A-7. MISCELLANEOUS PUBLICATIONS.

Requisitioning, Receipt, and Issue System	AR 725-50

APPENDIX B
MAINTENANCE ALLOCATION CHART (MAC)
Section 1: INTRODUCTION

B-1. General

This introduction provides a general explanation of all maintenance and repair functions authorized at the two maintenance levels under the Two-Level Maintenance System concept.

The MAC (immediately following the introduction) designates overall authority and responsibility for the performance of maintenance functions on the identified end item or component. The application of the maintenance functions to the end item or component shall be consistent with the capacities and capabilities of the designated maintenance levels, which are shown on the MAC in column (4) as:

Field — includes two subcolumns, Unit (C (operator/crew) and O (unit) maintenance) and Direct Support (F) maintenance

Sustainment — includes two subcolumns, general support (H) and depot (D)

The tools and test equipment requirements (immediately following the MAC) list the tools and test equipment (both special tools and common tool sets) required for each maintenance function as referenced for the MAC).

The remarks (immediately following the tools and test equipment requirements) contain supplemental instructions and explanatory notes for a particular maintenance function.

B-2. Maintenance Functions

Maintenance functions are limited to and defined as follows:

1. Inspect. To determine the serviceability of an item by comparing its physical, mechanical, and/or electrical characteristics with established standards through examination (e.g.; by sight, sound, or feel). This includes scheduled inspection and gagings and evaluation of cannon tubes.

2. Test. To verify serviceability by measuring the mechanical, pneumatic, hydraulic, or electrical characteristics of an item and comparing those characteristics with prescribed standards on a scheduled basis, i.e., load testing of lift devices and hydrostatic testing of pressure hoses.

3. Service. Operations required periodically to keep an item in proper operating condition, e.g., to clean (includes decontaminate, when required), to preserve, to drain, to paint, or to replenish fuel, lubricants, chemical fluids, or gases. This includes scheduled exercising and purging or recoil mechanisms.

4. Adjust. To maintain or regulate, within prescribed limits, by bringing into proper position, or by setting the operating characteristics to specified parameters.

5. Align. To adjust specified variable elements of an item to bring about optimum or desired performance.

APPENDIX B
MAINTENANCE ALLOCATION CHART (MAC)
Section 1: INTRODUCTION (Cont.)

6. Calibrate. To determine and cause corrections to be made or be adjusted on instruments of test, measuring, and diagnostic equipment used in precision measurement. Consists of comparisons of two instruments, one of which is a certified standard of known accuracy, to detect and adjust any discrepancy in the accuracy of the instrument being compared.

7. Remove/Install. To remove and install the same item when required to perform service or other maintenance functions. Install may be the act of emplacing, seating, or fixing into position a spare, repair part, or module (component or assembly) in a manner to allow the proper functioning of an equipment or system.

8. Replace. To remove an unserviceable item and install a serviceable counterpart in its place. “Replace” is authorized by the MAC and assigned maintenance level is shown as the third position code of the Source, Maintenance, and Recoverability (SMR) code.

9. Repair. The application of maintenance services, including fault location/troubleshooting, removal/installation, disassembly/assembly procedures, and maintenance actions to identify troubles and restore serviceability to an item by correcting specific damage, fault, malfunction, or failure in a part, subassembly, module (component or assembly), end item, or system.

NOTE

The following definitions are applicable to the “repair” maintenance function services: Inspect, test, service, adjust, align, calibrate, and/or replace.

- Fault location/troubleshooting. The process of investigating and detecting the cause of equipment malfunctioning; the act of isolating a fault within a system of Unit Under Test (UUT).

- Disassembly/assembly. The step-by-step breakdown (taking apart) of a spare/functional group coded item to the level of its least component, that is assigned an SMR code of the level of maintenance under consideration (i.e., identified as maintenance significant).

- Actions. Welding, grinding, riveting, straightening, facing, machining, and/or resurfacing.

10. Overhaul. That maintenance effort (service/action) prescribed to restore an item to a completely serviceable/operational condition as required by maintenance standards in appropriate technical publications. Overhaul is normally the highest degree of maintenance performed by the Army. Overhaul does not normally return an item to “like new” condition.

11. Rebuild. Consists of those services/actions necessary for the restoration of unserviceable equipment to a “like new” condition in accordance with original manufacturing standards. Rebuild is the highest degree of material maintenance applied to Army equipment. The rebuild operation includes the act of returning to zero those age measurements (e.g., hours/miles) considered in classifying Army equipment/components.

APPENDIX B
MAINTENANCE ALLOCATION CHART (MAC)
Section 1: INTRODUCTION (Cont.)

Explanation of Columns in the MAC

Column (1) Group Number. Column (1) lists FGC numbers, the purpose of which is to identify maintenance significant components, assemblies, subassemblies, and modules with the Next Higher Assembly (NHA).

Column (2) Component/Assembly. Column (2) contains the item names of components, assemblies, subassemblies, and modules for which maintenance is authorized.

Column (3) Maintenance Function. Column (3) lists the functions to be performed on the item listed in column (2). (For a detailed explanation of these functions, refer to “Maintenance Functions” outlined above).

Column (4) Maintenance Level. Column (4) specifies each level of maintenance authorized to perform each function listed in column (3), by indicating work time required (expressed as man-hours in whole hours or decimals) in the appropriate subcolumn. This work time figure represents the active time required to perform that maintenance function at the indicated level of maintenance. If the number or complexity of the tasks within the listed maintenance function varies at different maintenance levels, appropriate work time figures are to be shown for each level. The work time figure represents the average time required to restore an item (assembly, subassembly, component, module end item, or system) to a serviceable condition under typical field operating conditions. This time includes preparation time (including any necessary disassembly/assembly time), troubleshooting/fault location time, and quality assurance time in addition to the time required to perform the specific tasks identified for the maintenance functions authorized in the MAC. The symbol designations for the various maintenance functions are as follows:

Field:
C Operator or crew maintenance
O Unit maintenance
F Direction support maintenance

Sustainment:
H General support maintenance
D Depot maintenance

NOTE

The “L” maintenance level is not included in column (4) of the MAC. Functions to this level of maintenance are identified by a work time figure in the “H” column of column (4), and an associated reference code is used in the REMARKS column (6). This code is keyed to the remarks and the SRA complete repair application is explained there.

Column (5) Tools and Equipment Reference Code. Column (5) specifies, by code, those common tool sets (not individual tools), common Test, Measurement and Diagnostic Equipment (TMDE), and special tools, special TMDE and special support equipment required to perform the designated function. Codes are keyed to the entries in the tools and test equipment table.

Column (6) Remarks Code. When applicable, this column contains a letter code, in alphabetical order, which is keyed to the remarks table entries.

APPENDIX B
MAINTENANCE ALLOCATION CHART (MAC)
Section 1: INTRODUCTION (Cont.)

Explanation of Columns in the Tools and Test Equipment Requirements

Column (1) Tool or Test Equipment Reference Code. The tool or test equipment reference code correlates with a code used in column (5) of the MAC.

Column (2) Maintenance Level. The lowest level of maintenance authorized to use the tool or test equipment.

Column (3) Nomenclature. Name or identification of the tool or test equipment.

Column (4) National Stock Number (NSN). The NSN of the tool or test equipment.

Column (5) Tool Number. The manufacturer's part number, model number, or type number.

Explanation of Columns in the Remarks

Column (1) Remarks Code. The code recorded in column (6) of the MAC.

Column (2) Remarks. This column lists information pertinent to the maintenance function being performed as indicated in the MAC.

Table 1. MAC for CHASSIS, TRAILER: GENERATOR, 2 1/2-TON, 2-WHEEL, M200A1

(1) GROUP NUMBER	(2) COMPONENT/ ASSEMBLY	(3) MAINTENANCE FUNCTION	(4) MAINTENANCE LEVEL					(5) TOOLS AND EQPT	(6) REMARKS
			FIELD		SUSTAINMENT				
			UNIT	DS	GS	DEPOT			
			C	O	F	H	D		

Table 2. Tools and Test Equipment for CHASSIS, TRAILER: GENERATOR, 2 1/2-TON, 2-WHEEL, M200A1

(1) TOOLS OR TEST EQUIPMENT	(2) MAINTENANCE LEVEL	(3) NOMENCLATURE	(5) NATIONAL STOCK NUMBER	(6) TOOL NUMBER

Table 3. Remarks for CHASSIS, TRAILER: GENERATOR, 2 1/2-TON, 2-WHEEL, M200A1

REMARK CODES	REMARKS

SECTION II. MAINTENANCE ALLOCATION CHART

(1) GROUP NUMBER	(2) COMPONENT/ ASSEMBLY	(3) MAINTENANCE FUNCTION	(4) FIELD			SUSTAINMENT		(5) TOOLS AND EQUIPMENT	(6) REMARKS
			UNIT		DS	GS	DEPOT		
			C	O	F	H	D		
06	**ELECTRICAL SYSTEM**								
0609	*Lamps*	Replace		0.5				1	
	Lights	Replace		0.5				1	
		Repair		0.5				1 and 2	
0613	*Harness, Wiring Chassis*	Test		0.5				1 and 2	
		Replace		1.0				1	
		Repair		2.0				1 and 2	
11	**AXLE**								
1100	*Axle*	Inspect		0.2					
		Replace		8.0				1 and 2	
12	**BRAKES**								
1201	*Conduit, with Cable*	Replace		2.0				1	
	Lever, Handbrake	Adjust	0.5						
		Replace		2.0				1	
1202	*Service Brake Assembly*	Inspect		1.0				1	
		Adjust		1.0				1	
		Replace		3.0				1	
		Repair		3.0				1	
1204	*Cylinder, Master*	Service		0.1				1	
		Replace		1.0				1	
	Cylinder, Wheel	Replace		1.0				1	
	Lines, Fittings, and Hoses (Hydraulic)	Inspect		0.2				1	
		Replace		0.5				1	
1208	*Chamber, Air*	Replace		0.8				1	
		Repair		1.0				1	

SECTION II. MAINTENANCE ALLOCATION CHART—CONTINUED

(1) GROUP NUMBER	(2) COMPONENT/ ASSEMBLY	(3) MAINTENANCE FUNCTION	(4) FIELD UNIT C	(4) FIELD UNIT O	(4) FIELD DS F	(4) SUSTAINMENT GS H	(4) SUSTAINMENT DEPOT D	(5) TOOLS AND EQUIPMENT	(6) REMARKS
1208	*Coupling, Air*	Inspect		0.2					
		Replace		0.5				1	
		Repair		1.0				1	
	Filter, Air	Service		0.2				1	
		Replace		0.5				1	
	Valve, Check and Valve, Relay	Replace		0.5				1	
	Cock, Drain	Replace		0.5				1	
	Reservoir, Air	Service	0.5						
		Replace		0.5				1	
	Lines, Fittings, and Hoses (Air)	Inspect		0.5					
		Replace		1.0				1	
13	**WHEELS, HUBS**								
1311	*Drum, Brake*	Inspect		3.5				1 and 2	
		Replace		1.0				1 and 2	
		Repair				1.0		5	
	Hub, Wheel	Replace		1.0				1	
		Repair		1.5				1	
	Bearing, Hub	Replace		1.5				1	
	Gasket, Hub	Replace		2.0				1	
	Seal, Oil	Replace		2.0				1	
	Bearing, Wheel	Adjust		1.0				1 and 2	
		Replace		1.0				1	
	Stud Wheel	Replace		1.5				1	
	Wheel, Assembly	Replace	0.5					1	
1313	*Tires*	Inspect	0.1						
		Replace		0.5				2	
		Repair			1.0				

SECTION II. MAINTENANCE ALLOCATION CHART—CONTINUED

(1) GROUP NUMBER	(2) COMPONENT/ ASSEMBLY	(3) MAINTENANCE FUNCTION	(4) FIELD			SUSTAINMENT		(5) TOOLS AND EQUIPMENT	(6) REMARKS
			UNIT		DS	GS	DEPOT		
			C	O	F	H	D		
1313	*Tubes*	Service	0.1						
		Replace		0.5				2	
		Repair		0.8				2	
15	**FRAME AND ATTACHMENTS**								
1501	*Frame*	Repair			3.0			5	
1503	*Lunette, Towing*	Adjust		1.0				1	
		Replace		1.5				1	
	Safety Chains	Replace		0.5				1	
1507	*Leg, Landing*	Replace		1.0				1	
		Repair			1.5			1	
	Jack, Step Rear	Replace		1.0				1	
		Repair			1.0			1	
16	**SPRINGS**								
1601	*Spring*	Replace		4.0				1,2, and 3	
	Shackle, Spring	Replace		0.5				1,2, and 3	
22	**MISCELLANEOUS ACCESSORIES**								
	Reflector	Replace		0.5				1	
	Plate, Vehicle Data	Replace		0.5				1 and 2	

SECTION III. TOOLS AND TEST EQUIPMENT REQUIREMENT

(1)	(2)	(3)	(4)	(5)	
REFERENCE CODE	MAINTENACE CATEGORY	NOMENCLATURE	NATIONAL STOCK NUMBER	TOOL NUMBER	
1	O	Tool Kit, Mechanics, General	5180-00-177-7033		
2	O	Shop Equipment, Common Set Number 1	4910-00-754-0654		
3	O	Shop Equipment, Supplemental Set Number 1	4910-00-754-0653		
4	F	Shop Equipment, Field Maintenance Basic Set	4910-00-754-0705		
5	H	Shop Equipment, Wheeled Field Maintenance, Post, Camp, and Station	4910-00-348-7696		
6	O	Wrench	5120-00-795-0946	7950946	

APPENDIX C

COMPONENTS OF END ITEM AND BASIC ISSUE ITEMS LISTS

There are no components of end item and no basic issue items authorized for the generator trailer model M200A1.

APPENDIX D

ADDITIONAL AUTHORIZATION LIST

There are no additional items authorized for the support of the generator trailer model M200A1.

APPENDIX E

EXPENDABLE SUPPLIES AND MATERIALS LIST

Section I. INTRODUCTION

GENERAL

This appendix lists expendable supplies and materials you will need to operate and maintain the M200A1 generator trailer. These items are authorized to you by CTA 50-970, Expendable Items.

EXPLANATION OF COLUMNS

a. Column 1, Item Number. This is the number assigned to the entry in the listing

b. Column 2, Level. This column identifies the lowest level of maintenance that requires the listed items. The symbol designation for the various maintenance levels are as follows:

C – Operator or Crew
O – Organizational Maintenance
F – Direct Support
H – General Support Maintenance

c. Column 3, National Stock Number. This is the national stock number assigned to the item; use it to request or requisition the item.

d. Column 4, Description. Indicates the Federal item name and, if required, a description to identify the item. The last line for each item indicates the Federal Supply Code for Manufacturer (FSCM) in parentheses followed by the part number.

e. Column 5, Unit of Measure (U/M). Indicates the measure used in performing the actual maintenance function. This measure is expressed by a two-character alphabetical abbreviation (e.g., ea, in., pr). If the unit of measure differs from the unit of issue, requisition the lowest unit of issue that will satisfy your requirements.

SECTION II EXPENDABLE SUPPLIES AND MATERIALS LIST

(1) ITEM NUMBER	LEVEL	(2) NUMBER	(4) DESCRIPTION (FSCM)	(5) U/M
1	O		CONTAINER, EMPTY, 1-QUART	EA
2	O		BRAKE FLUID, SILICONE (BFS) (81349) MIL-B-46176	
		9150-01-102-9455	1-GALLON CAN	OZ.
3	O		GREASE, AUTOMOTIVE AND ARTILLERY (81349) MIL-G-10924	
		9150-00-190-0904	1-POUND CAN	OZ.
4	O		OIL, LUBRICATING, OE/HDO-30 (81349) MIL-L-2104C	
		9150-00-186-6181	1-QUART CAN TYPE 1	OZ.
		9150-00-188-9858	5-GALLON CAN	OZ.
		9150-00-188-9859	55-GALLON DRUM (16-GAGE)	OZ.
		9150-00-189-6729	55-GALLON DRUM (18-GAGE)	OZ.
5	O		OIL, LUBRICATING, OEA (81349) MIL-L-46167	
		9150-00-402-4478	1-QUART CAN	OZ.
		9150-00-402-2372	5-GALLON CAN	OZ.
		9150-00-495-7197	55-GALLON DRUM (18-GAGE)	OZ.
6	0		PLASTIC TUBING	FT
7	C		RAGS, WIPING (58536) A-A-531	
		7920-00-205-1711	50-POUND BALE	EA
8	O		SEALING COMPOUND	OZ.
9	O		SOAP SOLUTION	OZ.
10	C		SOLVENT, DRYCLEANING (81349) PD-680, TYPE II	
		6850-00-664-5685	1-QUART CAN	OZ.
		6850-00-281-1985	1-GALLON CAN	OZ.
		6850-00-285-8011	55-GALLON DRUM	OZ.

APPENDIX F

REPAIR PARTS AND SPECIAL TOOLS LISTS

Section I. INTRODUCTION

1. Scope.

This RPSTL authorizes spares and repair parts; special tools; special test, measurement, and diagnostic equipment (TMDE); and other special support equipment required for performance of organizational, direct support and general support maintenance of the M200A1 Trailers It authorizes the requisitioning, issue, and disposition of spares, repair parts, and special tools as indicated by the source, maintenance, and recoverability (SMR) codes.

2. General.

In addition to Section I, Introduction, this Repair Parts and Special Tools List (RPSTL) is divided into the following sections:

a. Section II - Repair Parts List. A list of spares and repair parts authorized by this RPSTL for use in performance of maintenance. This list also includes parts which must be removed for replacement of the authorized parts. Parts are composed of functional groups in ascending alphanumeric sequence, with the parts in each group listed in ascending figure and item number sequence. Bulk materials are listed by item name sequence. Repair parts for reparable special tools are also listed in the section.

b. Section III - Special Tools List. A list of special tools, special TMDE, and other special support equipment authorized by this RPSTL [as indicated by Basis of Issue (BOI) information in DESCRIPTION AND USABLE ON CODE (UOC) column] for the performance of maintenance.

c. Section IV - Cross-reference Index. A list, in National item identification number (NIIN) sequence, of all national stock numbered items appearing in the listing, followed by a list in alphanumeric sequence of all part numbers appearing in the listings. National stock numbers and part numbers are cross--referenced to each illustration figure and item number appearance. The figure and item number index lists figure and item numbers in alphanumeric sequence and cross-references NSN, FSCM, and part numbers.

3. Explanation of Columns (Sections II and III).

a. ITEM NO. [Column (l)]. Indicates the number used to identify items called out in the illustration.

b. SMR CODE [Column (2)]. The Source, Maintenance, and Recoverability (SMR) Code is a 5-position code containing supply/requisitioning information, maintenance level authorization criteria, and disposition instructions, as shown in the following breakout:

Source Code	Maintenance Code		Recoverability Code
xx	xx		x
1st two positions	3d position	4th position	5th position
How you get an item	Who can install, replace or use the item	Who can do complete repair* on the item	Who determines disposition on an unserviceable item

*complete Repair: Maintenance capacity, capability, and authority to perform all corrective tasks of the "Repair" function in a use/user environment in order to restore serviceability to a failed item.

(1) Source Code. The source code tells you how to get an item needed for maintenance, repair, or overhaul of an end item/equipment. Explanations of source codes are as follows:

Code	Explanation
PA PB PC** PD PE PF PG	Stocked items, use the applicable NSN to request/requisition items with these source codes. They are authorized to the level indicated by the code entered in the 3d position of the SMR code. **NOTE : Items coded PC are subject to deterioration.
KD KF KB	Items with these codes are not to be requested/requisitioned individually. They are part of a kit which is authorized to the maintenance level indicated in the 3d position of the SMR code. The complete kit must be requisitioned and applied.
MO-(Made at Org/AVUM Level) MF-(Made at DS/AVUM Level) MH-(Made at GS Level) ML-(Made at Specialized Repair Activity (SRA) MD-(Made at Depot)	Items with these codes are not to be requested/requisitioned individually. They must be made from bulk material which is identified by the part number in the DESCRIPTION AND USABLE ON CODE (UOC) column and listed in the Bulk Material group of this RPSTL. If the item is authorized to you by the 3d position code of the SMR code, but the source code indicates it is made at a

higher level, order the item from the higher level of maintenance.

AO-(Assembled by Org/AVUM Level)
AF-(Assembled by DS/AVUM Level)
AH-(Assembled by GS Level)
AL-(Assembled by SRA)
AD-(Assembled by Depot)

Items with these codes are not to be requested/requisitioned individually. The parts that make up the assembled item must be requisitioned or fabricated and assembled at the level of maintenance indicated by the source code. If the 3d position of the SMR code authorizes you to replace the item, but the source code indicates the item is assembled at a higher level, order the item from the higher level of maintenance.

XA - Do not requisition an “XA” coded item. Order its next higher assembly. (Also refer to the NOTE below).
XB - If an “XB” item is not available from salvage, order it using the FSCM and part number given.
xc - Installation drawing, diagram, instruction sheet, field service drawing, that is identified by manufacturer’s part number.
XD - Item is not stocked. Order an “XD” coded item through normal supply channels using the FSCM and part number given, if no NSN is available.

NOTE : Cannibalization or controlled exchange, when authorized, may be used as a source of supply for items with the above source codes, except for those source coded “XA” or those aircraft support items restricted by requirements of AR 700-42.

(2) Maintenance Code. Maintenance code tells you the level(s) of maintenance authorized to USE and REPAIR support items. The maintenance codes are entered in the third and fourth positions of the SMR code as follows:

(a) The maintenance code entered in the third position tells you the lowest maintenance level authorized to remove, replace, and use and item. The maintenance code entered in the third position will indicate authorization to one of the following levels of maintenance:

Code	Application/Explanation
C -	Crew or operator maintenance done within organizational or aviation unit maintenance.
O -	Organizational or aviation unit level can remove, replace, and use the item.
F -	Direct support or aviation intermediate level can remove, replace, and use the item.

Code	Application/Explanation
H -	General support level can remove, replace, and use the item.
L -	Specialized repair activity can remove, replace, and use the item.
D -	Depot level cam remove, replace, and use the item.

(b) The maintenance code entered in the fourth position tells whether or not the item is to be repaired and identifies the lowest maintenance level with the capability to do complete repair (i.e., perform all authorized repair functions.) (NOTE: Some limited repair may be done on the item at a lower level of maintenance, if authorized by the Maintenance Allocation Chart (MAC) and SMR codes.) This position will contain one of the following maintenance codes:

Code	Application/Explanation
o -	Organizational or aviation unit is the lowest level that can do complete repair of the item.
F -	Direct support or aviation intermediate is the lowest level that can do complete repair of the item.
H -	General support is the lowest level that can do complete repair of the item.
L -	Specialized repair activity is the lowest level that can do complete repair of the item.
D -	Depot is the lowest level that can do complete repair of the item.
z -	Non-reparable. No repair is authorized.
B -	No repair is authorized. (No parts or special tools are authorized for the maintenance of a “B” coded item) . However, the item may be reconditioned by adjusting, lubricating, etc., at the user level.

(3) Recoverability Code. Recoverability codes are assigned to items to indicate the disposition action on unserviceable items. The recoverability code is entered in the fifth position of the SMR code as follows:

Code	Application/Explanation
z -	Non-reparable item. When unserviceable, condemn and dispose of the item at the level of maintenance shown in the 3d position of the SMR code.

Code	Application/Explanation
o -	Reparable item. When uneconomically reparable, condemn and dispose of the item at organizational or aviation unit level.
F -	Reparable item. When uneconomically reparable, condemn and dispose of the item at the direct support or aviation intermediate level.
H -	Reparable item. When uneconomically reparable, condemn and dispose of the item at the general support level.
D -	Reparable item. When beyond lower level repair capability, return to depot. Condemnation and disposal of the item is not authorized below depot level.
L -	Reparable item. Condemnation and disposal not authorized below specialized repair activity (SRA).
A -	Item requires special handling or condemnation procedures because of specific reasons (e.g., precious metal content, high dollar value, critical material, or hazardous material). Refer to appropriate manuals/directives for specific instructions.

c. FSCM [Column (3)]. The Federal Supply Code for Manufacturer (FSCM) is a 5-digit numeric code which is used to identify the manufacturer, distributor, or Government agency, etc. , that supplies the item.

d. PART NUMBER [Column (4)]. Indicates the primary number used by the manufacturer (individual company, firm, corporation, or Government activity), which controls the design and characteristics of the item by means of its engineering drawings, specifications standards, and inspection requirements to identify an item or range of items.

NOTE : When you use an NSN to requisition an item, the item you receive may have a different part number from the part ordered.

e. DESCRIPTION AND USABLE ON CODE (UOC) [Column (5)]. This column includes the following information:

(1) The Federal item name and, when required, a minimum description to identify the item.

(2) The physical security classification of the item is indicated by the parenthetical entry (insert applicable physical security classification abbreviation, e.g., Phy Sec Cl (C) - Confidential, Phy Sec Cl (S) - Secret, Phy Sec C1 (T) - Top

Secret).

(3) Items that are included in kits and sets are listed below the name of the kit or set.

(4) Spare/repair parts that make up an assembled item are listed immediately following the assembled line item entry.

(5) Part numbers for bulk materials are referenced in this column in the line item entry for the item to be manufactured/fabricated. ‘

(6) When the item is not used with all serial numbers of the same model, the effective serial numbers are shown on the last line(s) of the description (before the UOC).

(7) The usable on code, when applicable (see paragraph 5, Special Information).

(8) In the Special Tools List section, the basis of issue (BOI) appears as the last line(s) in the entry for each special tool, special TMDE, and other special support equipment. When density of equipments supported exceeds density spread indicated on the BOI, the total authorization is increased proportionately.

(9) The statement “END OF FIGURE” appears just below the last item description in Column 5 for a given figure in both Section 11 and Section III.

f. QTY [Column (6)]. The QTY (quantity per figure column) indicates the quantity of the item used in the breakout shown on the illustration figure, which is prepared for a functional group, subfunctional group, or an assembly. A “V” appearing in this column in lieu of a quantity indicates that the quantity is variable and the quantity may vary from application to application.

4. Explanation of Columns (Section IV).

a. NATIONAL STOCK NUMBER (NSN) INDEX.

(1) STOCK NUMBER column. This column lists the NSN by National Item Identification Number (NIIN) sequence. The NIIN consists of the last nine digits of the NSN (i.e., 01-674-1467). When using this column to locate an item, ignore the first 4 digits of the NSN (i.e., 5305-). However, the complete NSN should be used when ordering items by stock number.

(2) FIG. column. This column lists the number of the figure where the item is identified/located. The figures are in numerical order in Section II and Section III.

(3) ITEM column. The item number identifies the item associated with the figure listed in the adjacent FIG. column.

This item is also identified by the NSN listed on the same line.

b. PART NUMBER INDEX. Part numbers in this index are listed by part number in ascending alphanumeric sequence (i.e., vertical arrangement of letter and number combination which places the first letter or digit of each group in order A through z, followed by the numbers O through 9 and each following letter or digit in like order).

(1) FSCM column. The Federal Supply Code for Manufacturer (FSCM) is a 5-digit numeric code used to identify the manufacturer, distributor, or Government agency, etc., that supplies the item.

(2) PART NUMBER column. Indicates the primary number used by the manufacturer (individual company, firm, corporation, or Government activity), which controls the design and characteristics of the item by means of its engineering drawings, specifications standards, and inspection requirements to identify an item or range of items.

(3) STOCK NUMBER column. This column lists the NSN for the associated part number and manufacturer identified in the PART NUMBER and FSCM columns to the left.

(4) FIG. column. This column lists the number of the figure where the item is identified/located in Section II and Section III.

(5) ITEM column. The item number is that number assigned to the item as it appears in the figure referenced in the adjacent figure number column.

c. FIGURE AND ITEM NUMBER INDEX.

(1) FIG. column. This column lists the number of the figure where the item is identified/located in Section II and Section III.

(2) ITEM column. The item number is that number assigned to the item as it appears in the figure referenced in the adjacent figure number column.

(3) STOCK NUMBER column. This column lists the NSN for the item.

(4) FSCM column. The Federal Supply Code for Manufacturer (FSCM) is a 5-digit numeric code used to identify the manufacturer, distributor, or Government agency, etc., that supplies the item.

(5) PART NUMBER column. Indicates the primary number used by the manufacturer (individual company, firm, corporation, or Government activity), which controls the design and

characteristics of the item by means of its engineering drawings. specifications standards, and inspection requirements to identify an item or range of items.

5. Special Information.

a. USABLE ON CODE. The usable on code appears in the lower left corner of the Description column heading. Usable on codes are shown as "UOC . . . . ." in the Description column (left justified) on the first line of applicable item description/nomenclature. Uncoded items are applicable to all models. Identification of the usable on codes used in the RPSTL are:

Not Applicable

b. FABRICATION INSTRUCTIONS. Bulk materials required to manufacture items are listed in the Bulk Material Group of this RPSTL. Part numbers for bulk materials are also referenced in the description column of the line item entry for the item to be manufactured/fabricated. Detailed fabrication instructions for items source coded to be manufactured/fabricated are found in Appendix G.

c. ASSEMBLY INSTRUCTIONS. Detailed assembly instructions for items source coded to be assembled from component spare/repair parts are found in Appendix G.

d. KITS . Line item entries for repair parts kits appear in a group in Section II (see Table of Contents).

e. INDEX NUMBERS. Items which have the word BULK in the figure column will have an index number shown in the item number column. This index number is a cross-reference between the National Stock Number/Part Number Index and the bulk material list in Section II.

6. How to Locate Repair Parts.

a. When National Stock Number or Part Number is Not Known.

(1) First. Using the Table of Contents, determine the assembly group or subassembly group to which the item belongs. This is necessary since figures are prepared for assembly groups and subassembly groups, and listings are divided into the same groups.

(2) Second. Find the figure covering the assembly group or subassembly group to which the item belongs.

(3) Third. Identify the item on the figure and use the Figure and Item Number Index to find the NSN.

b. When National Stock Number/Part Number is Known.

(1) First. Using the National Stock Number or Part

Number Index, find the pertinent National Stock Number or Part Number. The NSN index is in National Item Identification Number (NIIN) sequence. The part numbers in the Part Number index are listed in ascending alphanumeric sequence. Both indexes cross--reference you to the illustration/figure and item number of the item you are looking for.

(2) Second. Turn to the figure and item number, verify that the item is the one you're looking for, then locate the item number in the repair parts list for the figure.

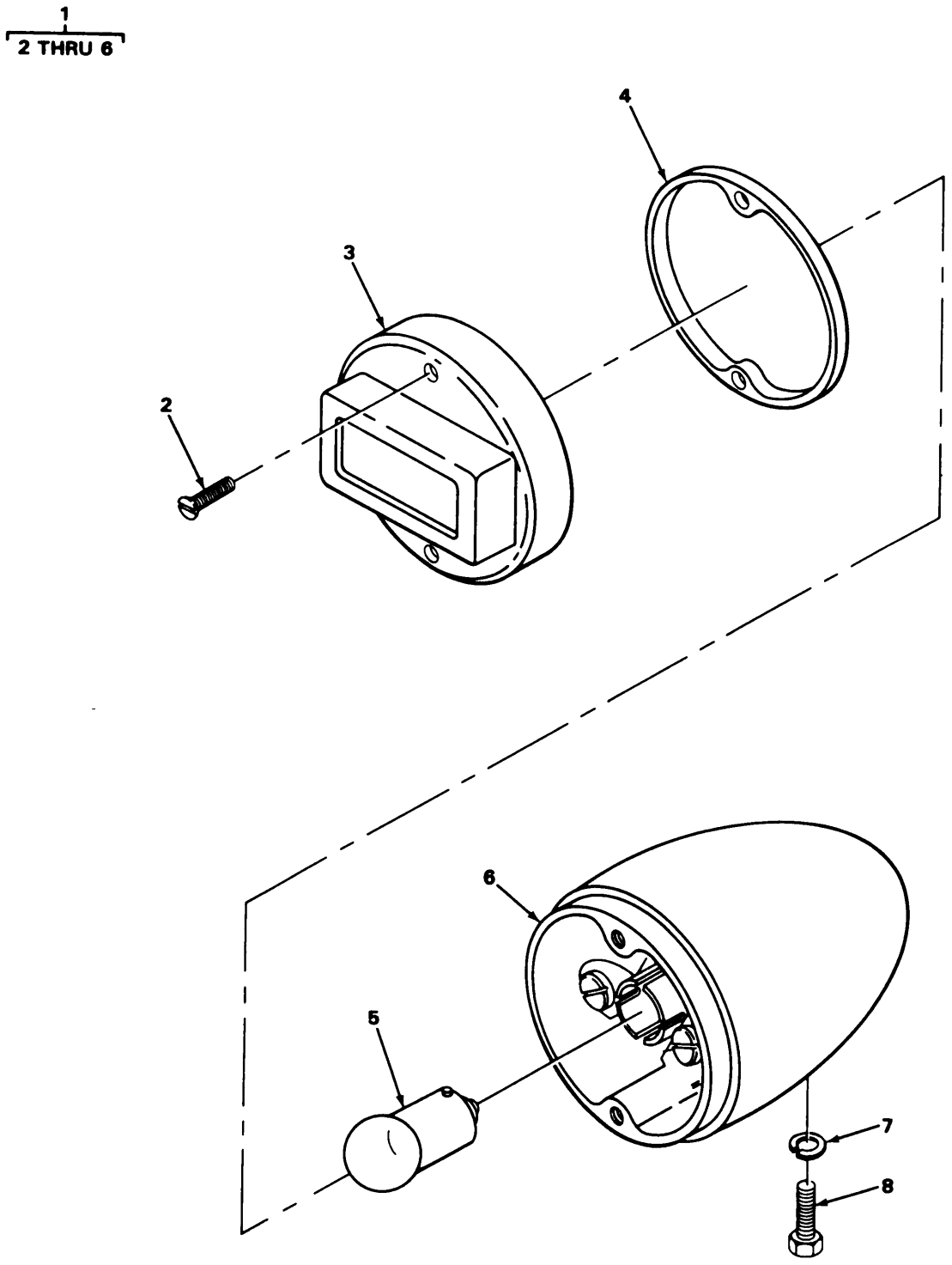

TA222951

FIGURE 1. BLACKOUT STOPLIGHT ASSEMBLY (EARLY MODELS).

(1) ITEM NO	(2) SMR CODE	(3) FSCM	(4) PART NUMBER	(5) DESCRIPTION AND USABLE ON CODE (UOC)	(6) QTY
				GROUP 06 ELECTRICAL SYSTEM 0609 LIGHTS FIG. 1. BLACKOUT STOPLIGHT ASSEMBLY (EARLY MODELS)	
1	PAOOO	96906	MS51302-1	STOP LIGHT,VEHICULA BLACKOUT(EARLY MODELS)	1
2	PAOZZ	96906	MS51959-46	SCREW,MACHINE	2
3	PAOZZ	19207	8741646	DOOR ASSEMBLY,STOP	1
4	PAOZZ	73331	5942528	GASKET	1
5	PAOZZ	96906	MS15570-1251	LAMP,INCANDESCENT	1
6	PAOZZ	19207	8741650	HOUSING, BLACKOUT L	1
7	PAOZZ	96906	MS35338-45	WASHER,LOCK	1
8	PAOZZ	96906	MS90726-29	BOLT,MACHINE	1
				END OF FIGURE	

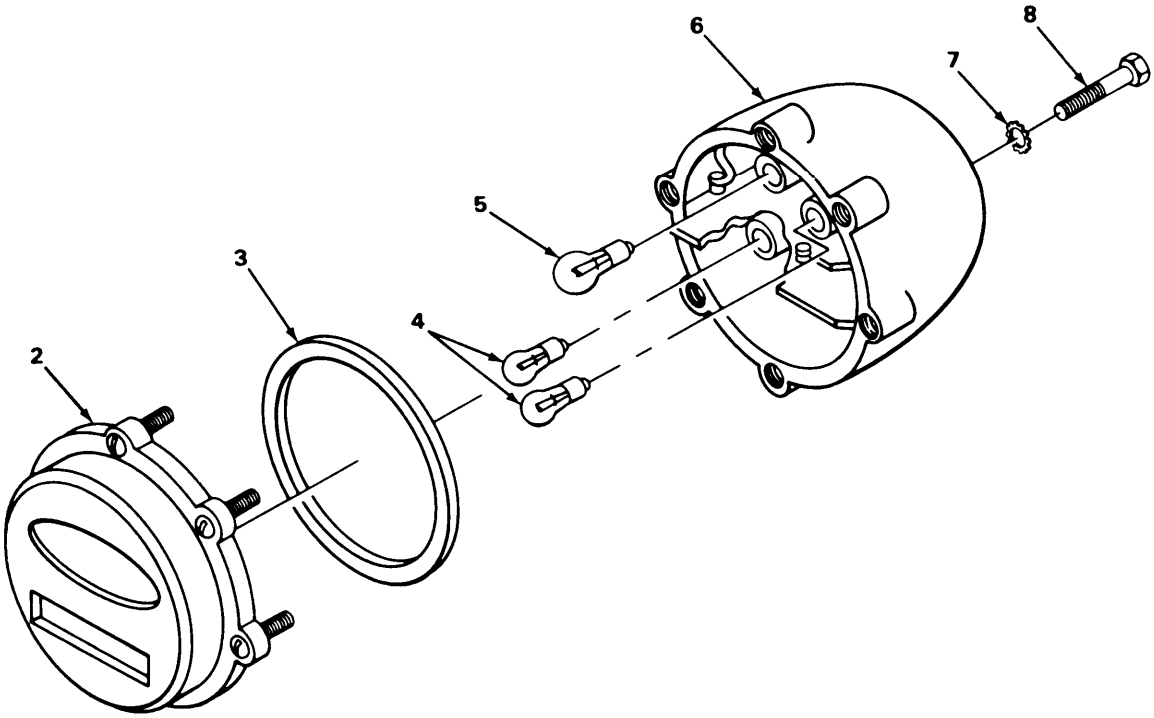

TA222952

FIGURE 2. SERVICE, STOP AND TAIL AND BLACKOUT TAILLIGHT (EARLY MODELS).

(1) ITEM NO	(2) SMR CODE	(3) FSCM	(4) PART NUMBER	(5) DESCRIPTION AND USABLE ON CODE (UOC)	(6) QTY
				0609 LIGHTS FIG. 2. SERVICE, STOP AND TAIL AND BLACKOUT TAILLIGHT (EARLY MODELS)	
1	PAOOO	96906	MS51329-1	STOP LIGHT-TAILLIGH TRAILER(EARLY MODELS)	2
2	PAOZZ	19207	7526020	DOOR ASSEMBLY,LIGHT	1
3	PAOZZ	19207	7320658	PACKING,PREFORMED	1
4	PAOZZ	96906	MS15570-1251	LAMP,INCANDESCENT	2
5	PAOZZ	96906	MS35478-1683	LAMP,INCANDESCENT	1
6	PAOZZ	96906	MS53047-1	LIGHT,PARKING	1
7	PAOZZ	12603	23E06	WASHER,LOCK	2
8	PFOZZ	96906	MS18154-58	SCREW,CAP,HEXAGON H	2

END OF FIGURE

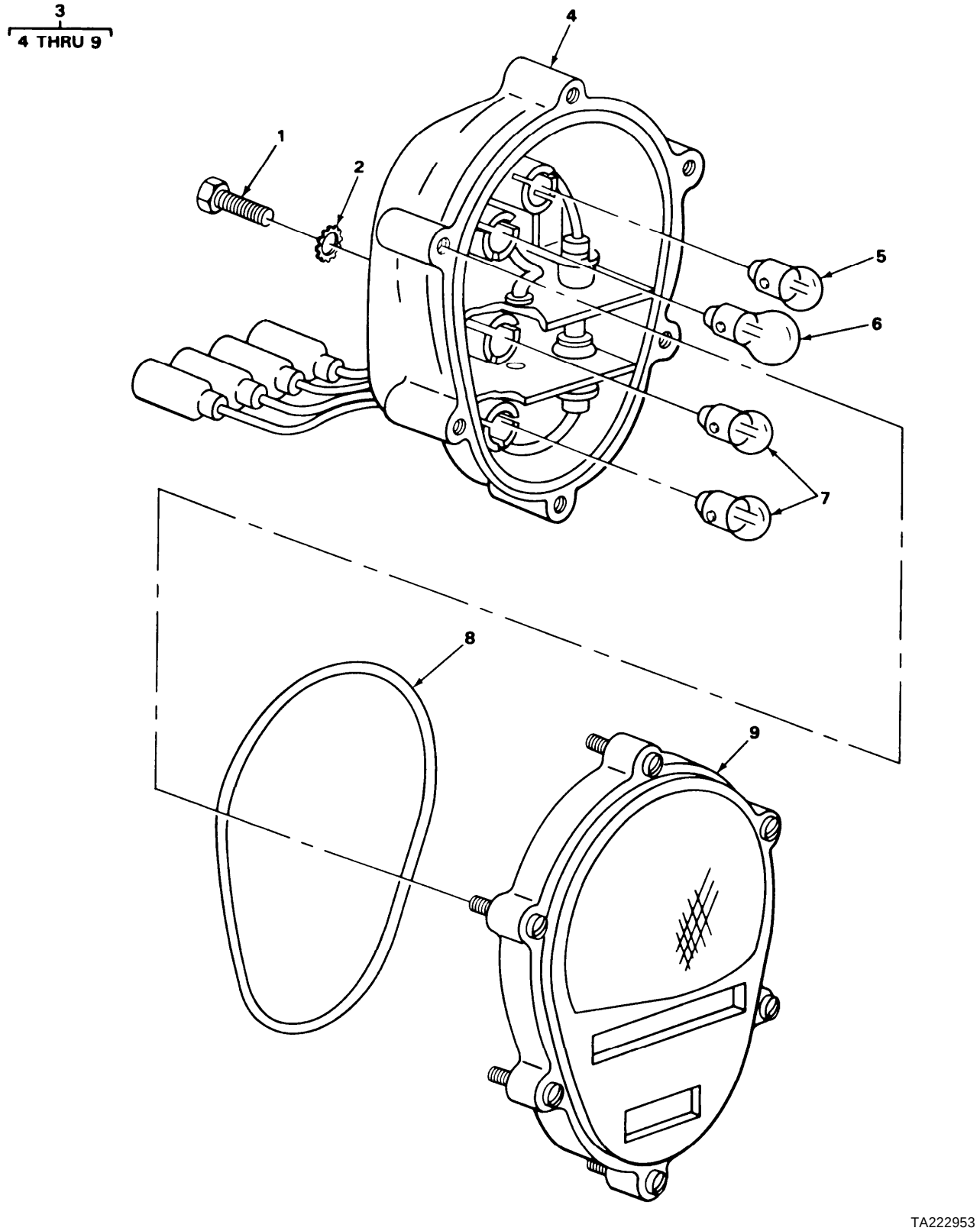

FIGURE 3. REAR COMPOSITE MARKER LIGHT ASSEMBLY (LATE MODELS).

(1) ITEM NO	(2) SMR CODE	(3) FSCM	(4) PART NUMBER	(5) DESCRIPTION AND USABLE ON CODE (UOC)	(6) QTY
				0609 LIGHTS FIG. 3. REAR COMPOSITE MARKER LIGHT ASSEMBLY (LATE MODELS)	
1	PAOZZ	96906	MS90725-57	SCREW,CAP,HEXAGON H	4
2	PAOZZ	96906	MS45904-76	WASHER,LOCK	4
2	PAOZZ	96906	MS35335-35	WASHER,LOCK	4
3	PAOOO	96906	MS52125-2	STOP LIGHT-TAILLIGH COMPOSITE(LATE MODELS)	2
4	PAOZZ	19207	11639520	BODY ASSEMBLY	1
5	PAOZZ	96906	MS15570-623	LAMP,INCANDESCENT	1
6	PAOZZ	96906	MS35478-1683	LAMP,INCANDESCENT	1
7	PAOZZ	96906	MS15570-1251	LAMP,INCANDESCENT	2
8	PAOZZ	19207	11639519-2	PACKING,PREFORMED	1
9	PAOZZ	19207	11639535	LENS,LIGHT	1
				END OF FIGURE	

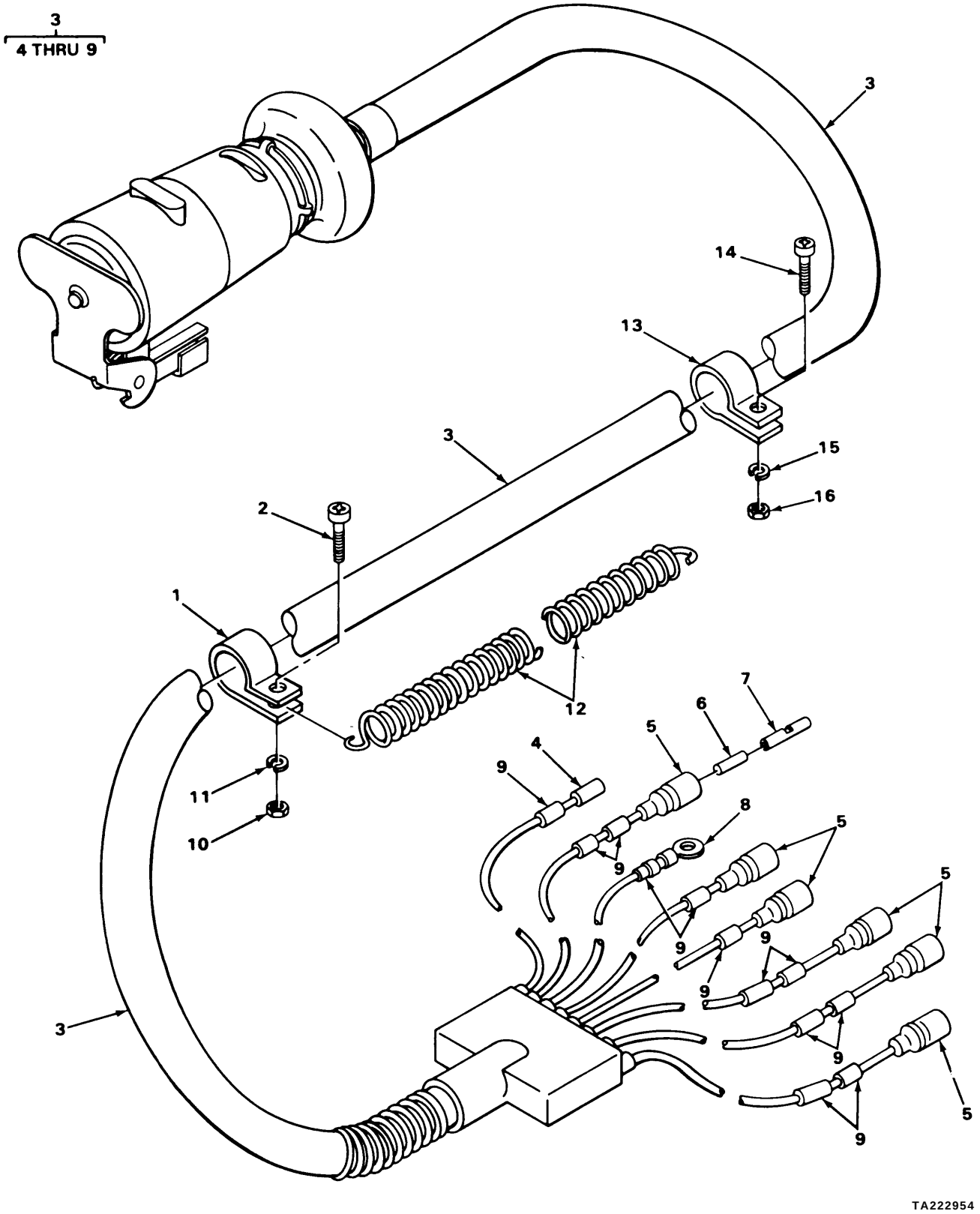

FIGURE 4. INTERVEHICULAR CABLE.

(1) ITEM NO	(2) SMR CODE	(3) FSCM	(4) PART NUMBER	(5) DESCRIPTION AND USABLE ON CODE (UOC)	(6) QTY
				0613 WIRING HARNESSES FIG. 4. INTERVEHICULAR CABLE	
1	PAOZZ	19207	545033	CLAMP,LOOP	1
2	PAOZZ	96906	MS35206-245	SCREW,MACHINE	1
3	PAOZZ	19207	10891263	WIRING HARNESS	1
4	PAOZZ	19207	8347216	CAP,PROTECTIVE,DUST	1
5	PAOZZ	19207	8338561	SHELL,ELECTRICAL CO	6
6	PAOZZ	19207	8338562	INSULATOR,BUSHING	6
7	PAOZZ	19207	8338564	TERMINAL ASSEMBLY	6
8	XDOZZ	96906	MS25036-54	TERMINAL	1
9	PAOZZ	81349	M43436/1-1	BAND,MARKER	12
10	PAOZZ	96906	MS35649-282	NUT,PLAIN,HEXAGON	1
11	PAOZZ	96906	MS35338-42	WASHER,LOCK	1
12	PAOZZ	40342	N12929	SPRING,HELICAL,EXTE	1
13	PAOZZ	96906	MS21333-107	CLAMP,LOOP	1
14	PAOZZ	96906	MS35206-281	SCREW,MACHINE	1
15	PAOZZ	96906	MS35338-44	WASHER,LOCK	1
16	PAOZZ	96906	MS51967-2	NUT,PLAIN,HEXAGON	1

END OF FIGURE

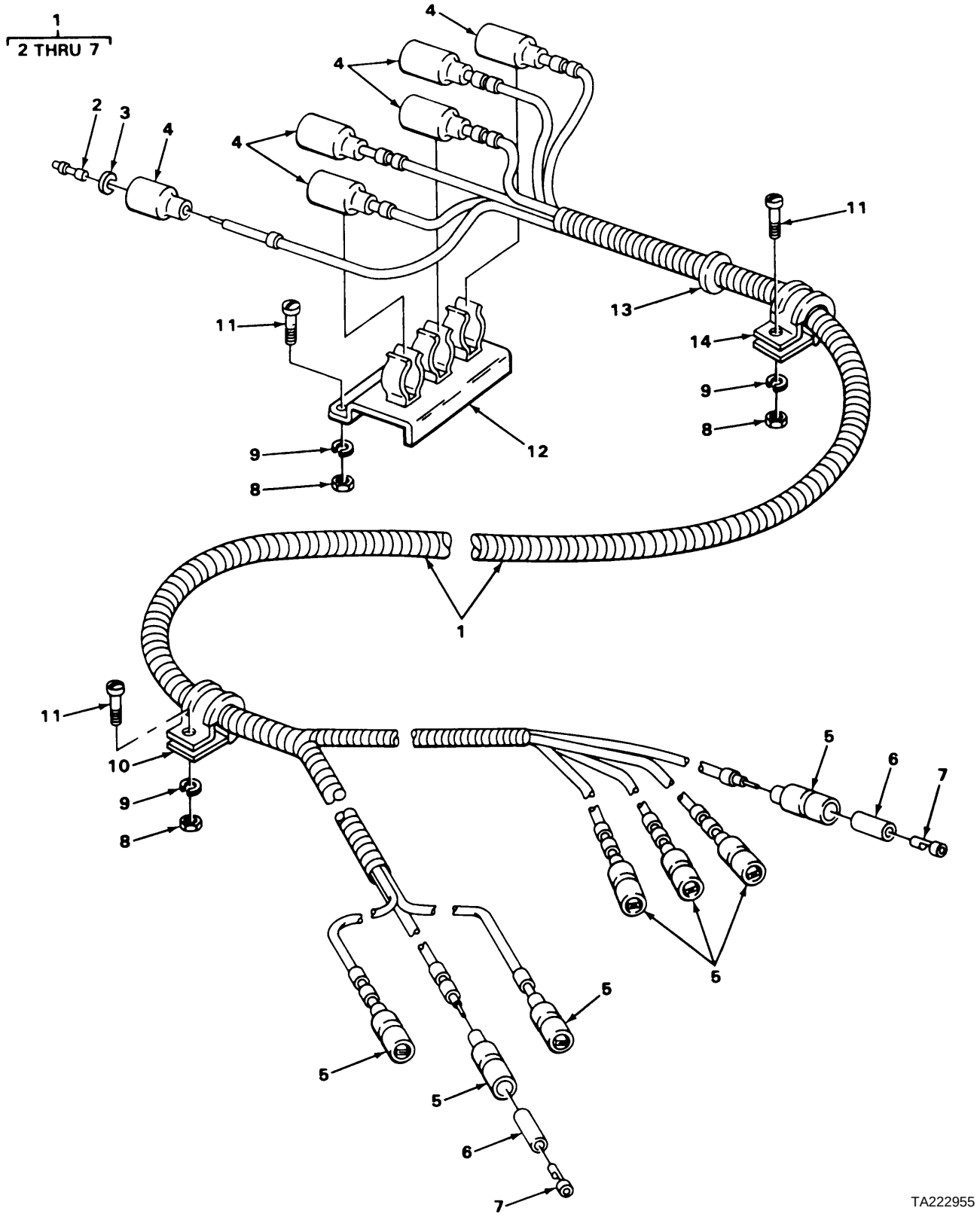

FIGURE 5. CHASSIS WIRING HARNESS FOR BLACKOUT STOPLIGHT ASSEMBLY.

(1) ITEM NO	(2) SMR CODE	(3) FSCM	(4) PART NUMBER	(5) DESCRIPTION AND USABLE ON CODE (UOC)	(6) QTY
				0613 WIRING HARNESSES FIG. 5. CHASSIS WIRING HARNESS FOR BLACKOUT STOPLIGHT ASSEMBLY	
1	PAOZZ	19207	8742401	WIRING HARNESS TRAILER	1
2	PAOZZ	96906	MS27148-2	CONTACT,ELECTRICAL PART OF KIT P/N 7550526	6
3	PAOZZ	19207	8338567	WASHER,SLOTTED PART OF KIT P/N 7550526	6
4	PAOZZ	19207	8338566	SHELL,ELECTRICAL CO PART OF KIT P/N 7550526	6
5	PAOZZ	19207	8338561	SHELL,ELECTRICAL CO PART OF KIT P/N 7550526	7
6	PAOZZ	19207	8338562	INSULATOR,BUSHING PART OF KIT P/N 7550526	7
7	PAOZZ	19207	8338564	TERMINAL ASSEMBLY PART OF KIT P/N 7550526	7
8	PAOZZ	96906	MS51967-2	NUT,PLAIN,HEXAGON	17
9	PAOZZ	96906	MS35338-44	WASHER,LOCK	17
10	XDOZZ	21450	120520	CLAMP,LOOP	1
11	PAOZZ	96906	MS35206-281	SCREW,MACHINE	17
12	PAOZZ	19207	8747908	CLIP ASSY,SPRING,TE	4
13	PAOZZ	19207	117964	GROMMET,NONMETALLIC	1
14	PAOZZ	96906	MS21333-38	CLAMP,LOOP	8

END OF FIGURE

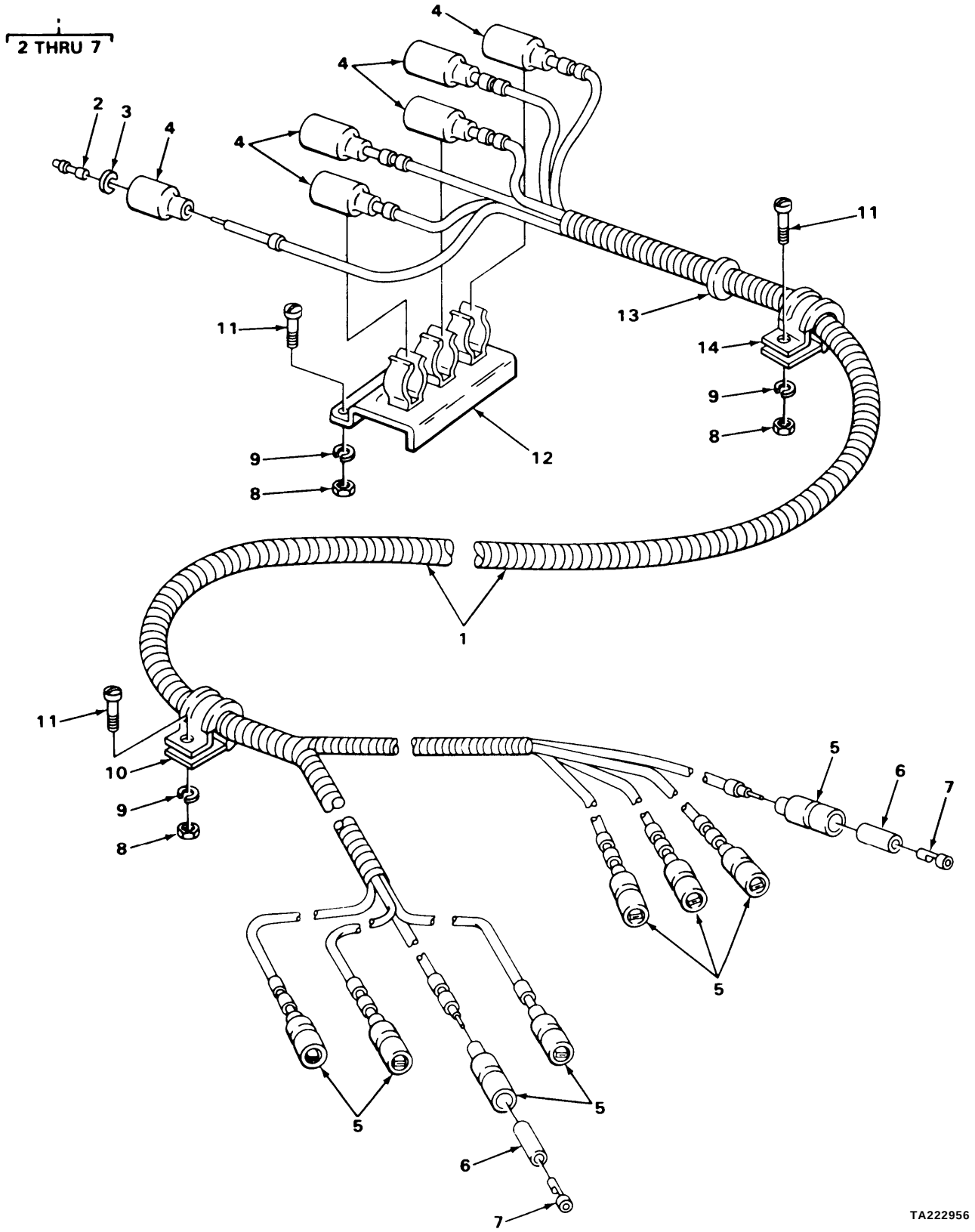

FIGURE 5. CHASSIS WIRING HARNESS SERVICE, STOP, TAIL AND BLACKOUT TAILLIGHT.

(1) ITEM NO	(2) SMR CODE	(3) FSCM	(4) PART NUMBER	(5) DESCRIPTION AND USABLE ON CODE (UOC)	(6) QTY
				0613 WIRING HARNESSES FIG. 6. CHASSIS WIRING HARNESS FOR SERVICE, STOP, TAIL AND BLACKOUT TAILLIGHT	
1	PFOOO	19207	11652180	WIRING HARNESS	1
2	PAOZZ	96906	MS27148-2	CONTACT,ELECTRICAL PART OF KIT P/N 7550526	6
3	PAOZZ	19207	8338567	WASHER,SLOTTED PART OF KIT P/N 7550526	6
4	PAOZZ	19207	8338566	SHELL,ELECTRICAL CO PART OF KIT P/N 7550526	6
5	PAOZZ	19207	8338561	SHELL,ELECTRICAL CO PART OF KIT P/N 7550526	8
6	PAOZZ	19207	8338562	INSULATOR,BUSHING PART OF KIT P/N 7550526	8
7	PAOZZ	19207	8338564	TERMINAL ASSEMBLY PART OF KIT P/N 7550526	8
8	PAOZZ	96906	MS51967-2	NUT,PLAIN,HEXAGON	17
9	PAOZZ	96906	MS35338-44	WASHER,LOCK	17
10	XDOZZ	21450	120520	CLAMP,LOOP	1
11	PAOZZ	96906	MS35206-281	SCREW,MACHINE	17
12	PAOZZ	19207	8747908	CLIP ASSY,SPRING,TE	4
13	PAOZZ	19207	117964	GROMMET,NONMETALLIC	1
14	PAOZZ	96906	MS21333-38	CLAMP,LOOP	8
				END OF FIGURE	

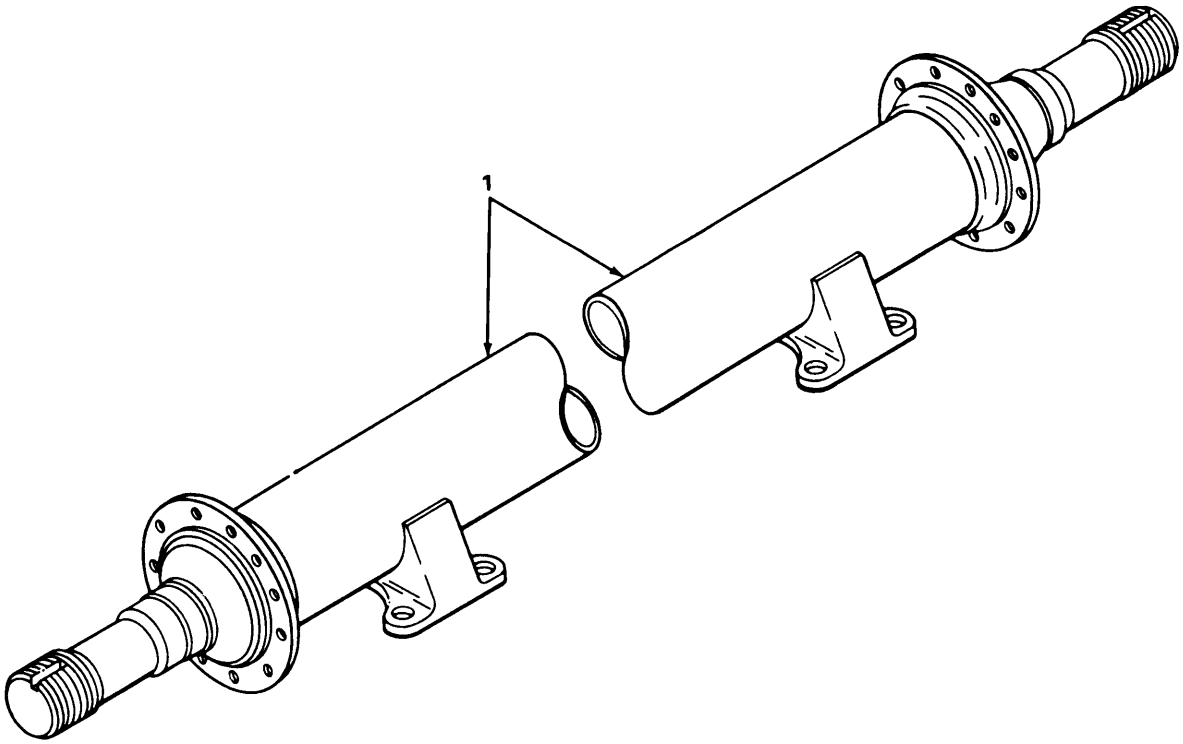

TA222957

FIGURE 7. AXLE ASSEMBLY.

(1) ITEM NO	(2) SMR CODE	(3) FSCM	(4) PART NUMBER	(5) DESCRIPTION AND USABLE ON CODE (UOC)	(6) QTY
				GROUP 11 REAR AXLES 1100 REAR AXLE ASSEMBLY FIG. 7. AXLE ASSEMBLY	
1	PAOZZ	19207	7263713	AXLE,VEHICULAR,NOND	1
				END OF FIGURE	

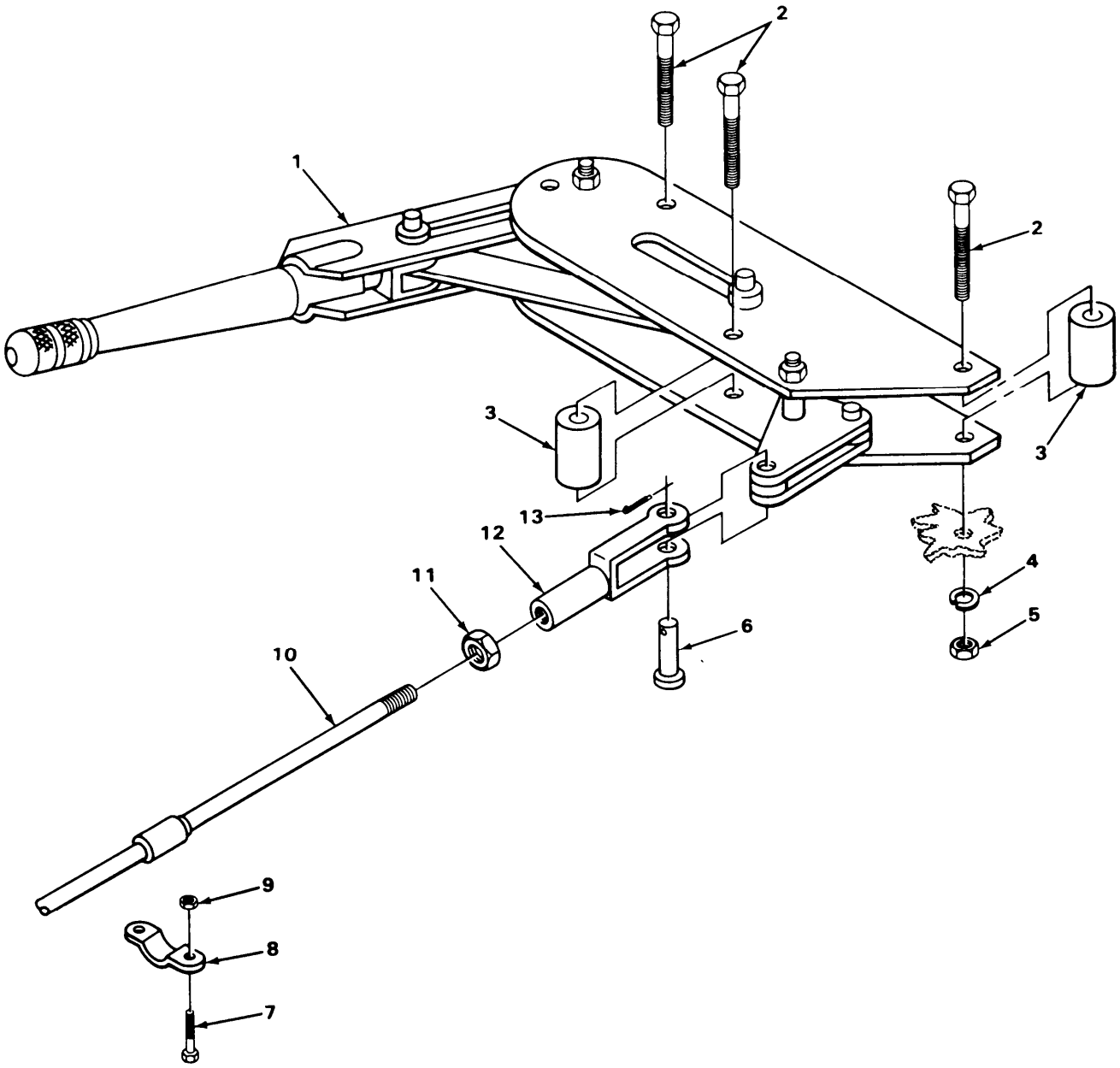

TA222958

FIGURE 8. HANDBRAKE LEVER MECHANISM.

(1) ITEM NO	(2) SMR CODE	(3) FSCM	(4) PART NUMBER	(5) DESCRIPTION AND USABLE ON CODE (UOC)	(6) QTY
				GROUP 12 BRAKES 1201 HAND BRAKES FIG. 8. HANDBRAKE LEVER MECHANISM	
1	PAOZZ	92867	3100C21B180Y	LEVER ASSY,PARKING	2
2	PAOZZ	96906	MS90728-67	SCREW,CAP,HEXAGON H	6
3	PAOZZ	19207	8699500	SPACER,SLEEVE	6
4	PAOZZ	96906	MS35338-46	WASHER,LOCK	6
5	PAOZZ	96906	MS51922-17	NUT,SELF-LOCKING,HE	6
6	PFOZZ	96906	MS35810-4	PIN,STRAIGHT,HEADED	2
7	PAOZZ	96906	MS90728-36	BOLT,MACHINE	4
8	PAOZZ	19207	5303461	BRACKET,BRAKE CABLE	2
9	PAOZZ	10001	419908PC40	NUT,SELF-LOCKING,HE	4
10	PFOZZ	96906	MS53060-3	CABLE ASSEMBLY,HAND	2
11	PAOZZ	96906	MS51968-8	NUT,PLAIN,HEXAGON	2
12	PFOZZ	96906	MS35812-4	CLEVIS,ROD END	2
13	PAOZZ	96906	MS24665-283	PIN,COTTER	2
				END OF FIGURE	

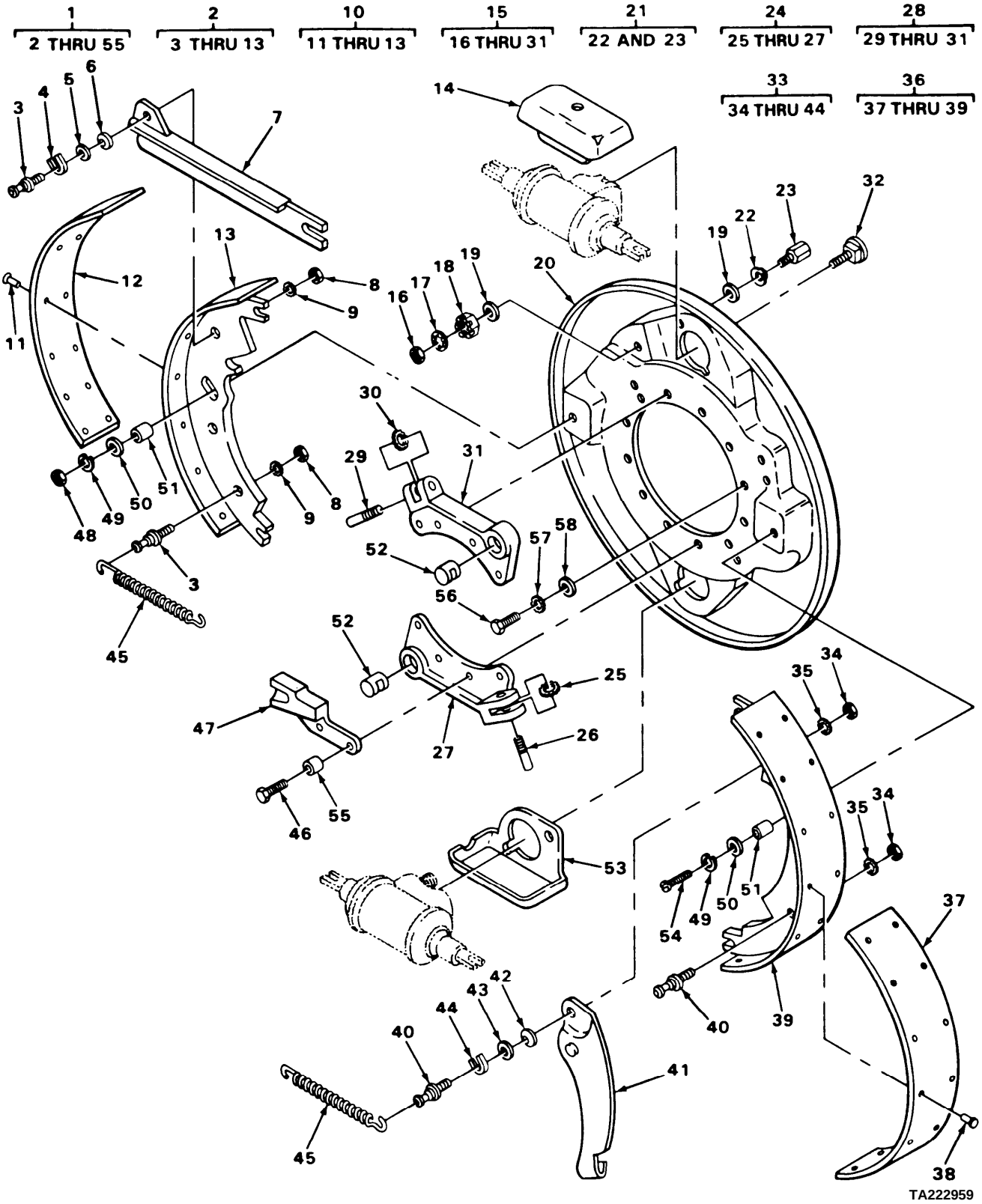

FIGURE 9. BRAKE ASSEMBLY.

(1) ITEM NO	(2) SMR CODE	(3) FSCM	(4) PART NUMBER	(5) DESCRIPTION AND USABLE ON CODE (UOC)	(6) QTY
				1202 SERVICE BRAKES FIG. 9. BRAKE ASSEMBLY	
1	PAOOO	78500	A3236N1262	BRAKE,SHOE TYPE RIGHT HAND	1
1	PAOOO	78500	A3236M1261	BRAKE,SHOE TYPE LEFT HAND	1
2	PAOOO	63477	FE17760	BRAKE SHOE FRONT RIGHT HAND	1
2	PAOOO	63477	FE17759	BRAKE SHOE FRONT LEFT HAND	1
3	PAOZZ	63477	F17758	PIN,SERVICE BRAKE	2
4	PAOZZ	19207	8733937	WASHER,SLOTTED	1
5	PAOZZ	19207	8733936	WASHER,FLAT	1
6	PAOZZ	19207	8733935	WASHER,SPRING TENSI	1
7	PAOZZ	19207	8733926	CONNECTING LINK,RIG LEFT HAND	1
7	PAOZZ	63477	F017762	LINK EMERGENCY BRAK RIGHT HAND	1
8	PAOZZ	96906	MS51970-4	NUT,PLAIN,HEXAGON	2
9	PAOZZ	96906	MS35335-36	WASHER,LOCK	2
10	PAOFF	63477	F19223	BRAKE SHOE FRONT RIGHT AND LEFT	1
11	PAFZZ	96906	MS16536-175	RIVET,TUBULAR	14
12	PAFZZ	19207	8720517	LINING,FRICTION	1
13	XDFZZ	19207	7064979	SHOE	1
14	PAOZZ	63477	F9556	SHIELD,BRAKE DISK	1
15	PAOZZ	63477	FE19580	PLATE,BACKING,BRAKE RIGHT HAND	1
15	PAOZZ	78500	A1-3236M1261	PLATE,BACKING,BRAKE LEFT HAND	1
16	PAOZZ	96906	MS35691-13	NUT,PLAIN,HEXAGON	2
17	PAOZZ	96906	MS35333-41	WASHER,LOCK	2
18	PAOZZ	63477	FC14257	PINION,BRAKE SHOE A	2
19	PAOZZ	19207	7412120	WASHER,FLAT	4
20	PAOZZ	19207	8733933	PLATE,BACKING,BRAKE RIGHT HAND	1
20	PAOZZ	78500	A1-3236M1261	PLATE,BACKING,BRAKE LEFT HAND	1
21	PAOZZ	19207	8720331	SPRING AND BOLT ASS	1
22	XDOZZ	19207	8712119	WASHER	1
23	XDOZZ	19207	8712118	STUD	1
24	PAOOO	63477	F17764	SUPPORT AND ADJUSTE LEFT HAND	1
25	PAOZZ	63477	FC22219	WHEEL,SLACK ADJUSTE	1
26	PAOZZ	63477	FC22221	SCREW,BRAKE SHOE AD	1
27	PAOZZ	19207	8733908	SUPPORT ASSY	1
28	PAOOO	18876	8733897	SUPPORT AND ADJUSTE RIGHT HAND	1
29	PAOZZ	63477	FC22220	SCREW,BRAKE SHOE AD LEFT HAND	1
30	PAOZZ	63477	FC22219	WHEEL,SLACK ADJUSTE	1
31	PAOZZ	19207	8733909	SUPPORT ASSEMBLY	1
32	PAOZZ	19207	7411760	BOLT,SQUARE NECK	1
33	PAOOO	63477	F19223	BRAKE SHOE RIGHT HAND	1
33	PAOOO	63477	FE17748	BRAKE SHOE LEFT HAND	1
34	PAOZZ	96906	MS51970-4	NUT,PLAIN,HEXAGON	2
35	PAOZZ	96906	MS35335-36	WASHER,LOCK	2
36	PAOFF	63477	F19223	BRAKE SHOE	1
37	PAFZZ	19207	8720517	LINING,FRICTION	1
38	PAFZZ	96906	MS16536-175	RIVET,TUBULAR	14
39	XDFZZ	19207	7064979	SHOE	1
40	PAOZZ	63477	F17758	PIN,SERVICE BRAKE	2
41	PAOZZ	02686	123917	LEVER,LEFT HAND BRA	1
41	PAOZZ	63477	F17751	LEVER,RIGHT HAND BR	1
42	PAOZZ	19207	8733935	WASHER,SPRING TENSI	2

(1) ITEM NO	(2) SMR CODE	(3) FSCM	(4) PART NUMBER	(5) DESCRIPTION AND USABLE ON CODE (UOC)	(6) QTY
43	PAOZZ	19207	8733936	WASHER,FLAT	2
44	PAOZZ	19207	8733937	WASHER,SLOTTED	2
45	PAOZZ	19207	8720515	SPRING,HELICAL,EXTE	
46	PAOZZ	96906	MS90726-60	SCREW,CAP,HEXAGON H	
47	PAOZZ	63477	F19582	RAMP,BRAKE CABLE RIGHT HAND	
47	PAOZZ	63477	F19581	RAMP,CABLE LEFT HAND	1
48	PAOZZ	96906	MS51970-1	NUT,PLAIN,HEXAGON	1
49	PAOZZ	96906	MS35338-44	WASHER,LOCK	2
50	PFOZZ	63477	F6783	WASHER,FLAT	2
51	PAOZZ	19207	7412103	SPACER,SLEEVE	1
52	PAOZZ	63477	F12088	PIN,STRAIGHT,HEADLE	2
53	PAOZZ	19207	7412068	SHIELD,BRAKE DISK	1
54	PAOZZ	96906	MS90726-8	SCREW,CAP,HEXAGON H	1
55	PAOZZ	19207	7373354	SPACER,RING	2
56	PAOZZ	96906	MS90726-64	SCREW,CAP,HEXAGON H	8
57	PAOZZ	96906	MS35335-35	WASHER,LOCK	8
58	PFOZZ	63477	F6783	WASHER,FLAT	8

END OF FIGURE

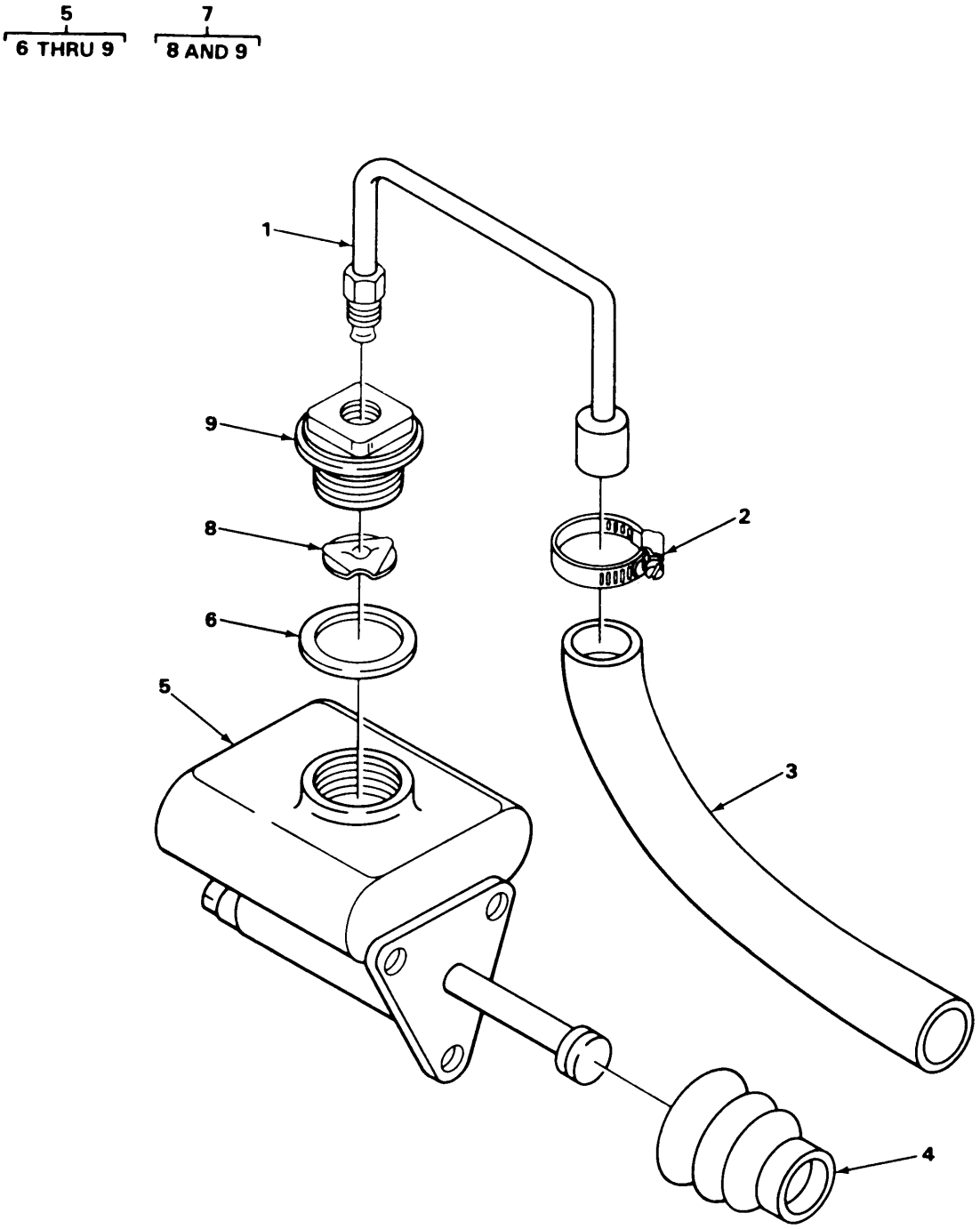

TA222960

FIGURE 10. MASTER CYLINDER HYDRAULIC BRAKE ASSEMBLY.

(1) ITEM NO	(2) SMR CODE	(3) FSCM	(4) PART NUMBER	(5) DESCRIPTION AND USABLE ON CODE (UOC)	(6) QTY
				1204 HYDRAULIC BRAKE SYSTEM FIG. 10. MASTER CYLINDER ASSEMBLY	
1	PFOZZ	23705	A298322	TUBE ASSEMBLY,METAL	1
2	PFOZZ	96906	MS35842-10	CLAMP,HOSE	1
3	PAOZZ	96906	MS521301A204120	HOSE,NONMETALLIC	1
4	PAOZZ	19207	7979699	BOOT,DUST AND MOIST	1
5	PAOZZ	63477	FE14240	CYLINDER ASSEMBLY,H	1
6	PAOZZ	80205	NAS1611-123	PACKING,PREFORMED	1
7	PAOZZ	63477	7979691	CAP,FILLER OPENING	1
8	PAOZZ	63477	FE14240	CYLINDER ASSEMBLY,H	1
9	PAOZZ	19207	7979690	ADAPTER,STRAIGHT,TU	1

END OF FIGURE

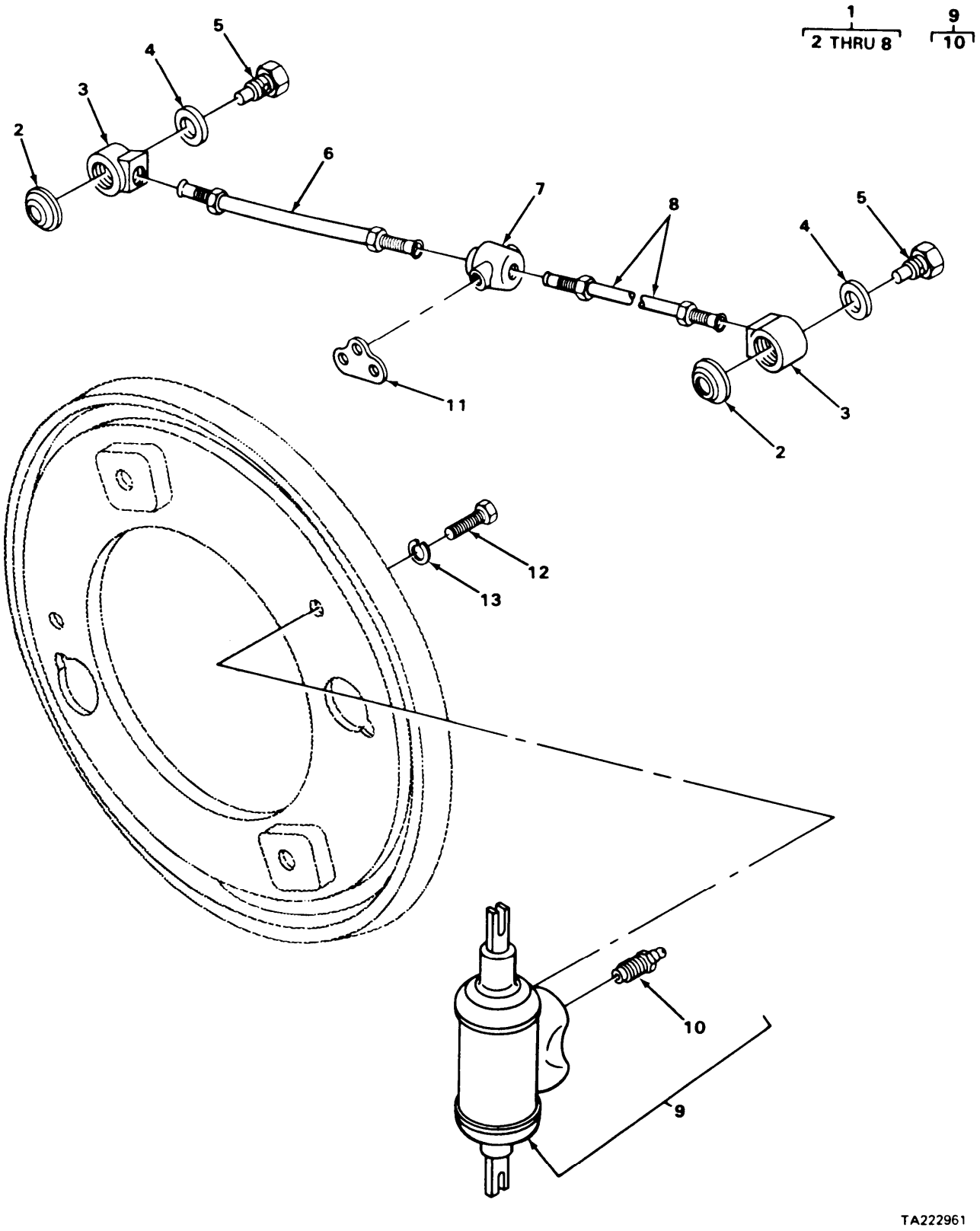

FIGURE 11. HYDRAULIC WHEEL CYLINDER.

(1) ITEM NO	(2) SMR CODE	(3) FSCM	(4) PART NUMBER	(5) DESCRIPTION AND USABLE ON CODE (UOC)	(6) QTY
				1204 HYDRAULIC BRAKE SYSTEM	
				FIG. 11. HYDRAULIC WHEEL CYLINDER	
1	PAOOO	63477	FD13346	TUBE ASSEMBLY,METAL LEFT HAND	1
1	PAOOO	63477	FD13347	TUBE ASSEMBLY,METAL RIGHT HAND	1
2	PAOZZ	19207	7412088	WASHER,SHOULDERED A	2
3	PAOZZ	19207	7745464	TEE,TUBE	2
4	PAOZZ	19207	5214539	WASHER,FLAT	2
5	PAOZZ	63477	7412079	BOLT,FLUID PASSAGE	2
6	PAOZZ	19207	8733922	TUBE ASSEMBLY,METAL REAR	1
7	PAOZZ	63477	FC13927E	CONNECTOR,MULTIPLE,	1
8	PAOZZ	19207	8733920	TUBE ASSEMBLY,METAL FRONT	1
9	PAOZZ	19207	8733928	CYLINDER ASSEMBLY,H	4
10	PAOZZ	19207	7373260	BLEEDER VALVE,HYDRA	1
11	PAOZZ	63477	F19636	BRACKET,RIGHT HAND RIGHT HAND	1
11	PAOZZ	63477	F19635	BRACKET,LEFT HAND LEFT HAND	1
12	PAOZZ	96906	MS90725-31	BOLT,MACHINE	4
13	PAOZZ	96906	MS35338-45	WASHER,LOCK	4

END OF FIGURE

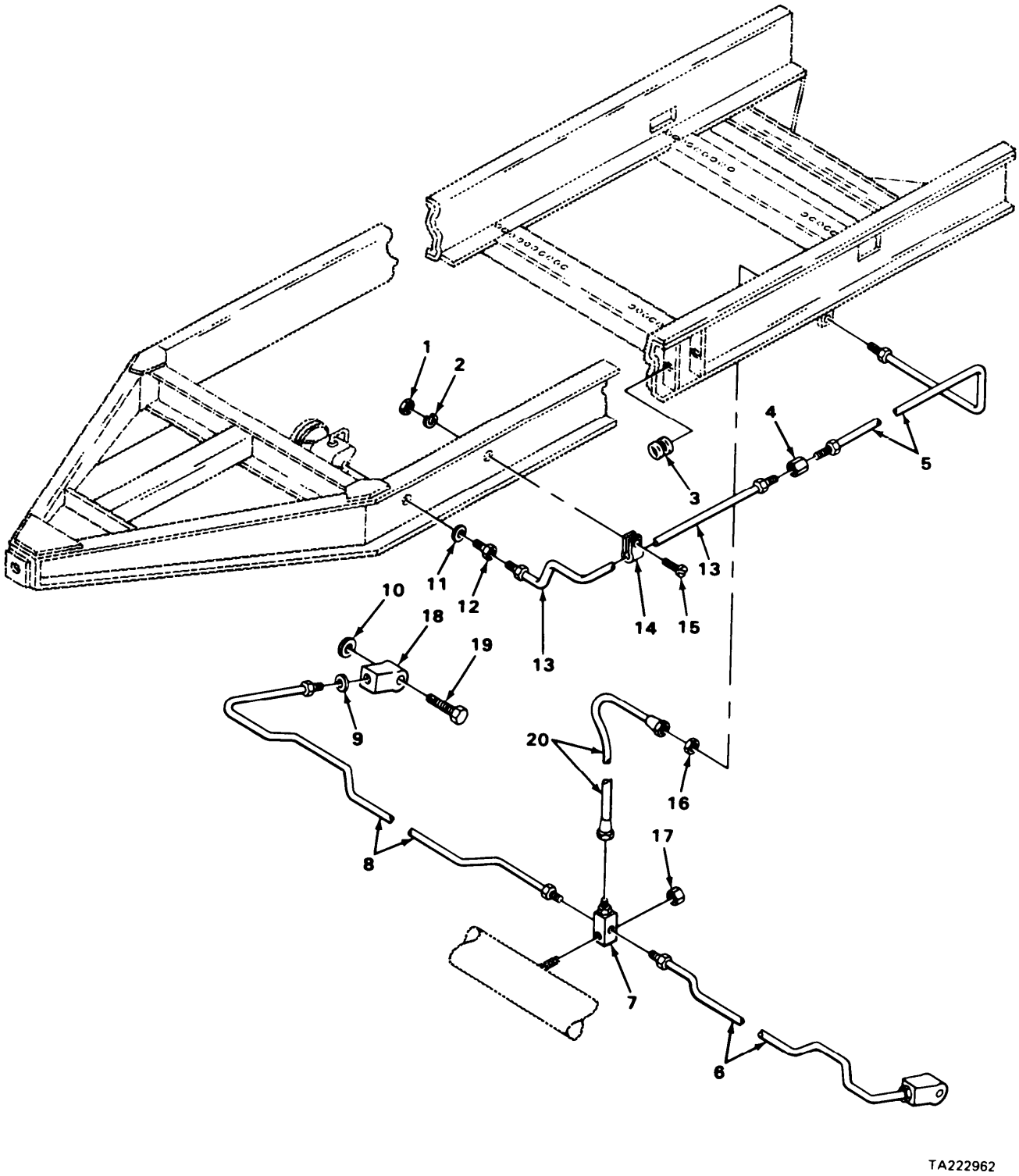

FIGURE 12. HYDRAULIC BRAKE SYSTEM.

(1) ITEM NO	(2) SMR CODE	(3) FSCM	(4) PART NUMBER	(5) DESCRIPTION AND USABLE ON CODE (UOC)	(6) QTY
				1204 HYDRAULIC BRAKE SYSTEM FIG. 12. HYDRAULIC BRAKE SYSTEM	
1	PFOZZ	19207	7706441	NUT,PLAIN,HEXAGON	6
2	PAOZZ	96906	MS35338-44	WASHER,LOCK	6
3	PAOZZ	19207	117964	GROMMET,NONMETALLIC	4
4	PAOZZ	96906	MS51877-4	COUPLING,TUBE	1
5	PAOZZ	74405	F1567-3-1	TUBE ASSEMBLY,METAL	1
6	PAOZZ	74405	F1567-3-3	TUBE ASSY,METAL	1
7	PAOZZ	79470	5167679	CONNECTOR,MULTIPLE,	1
8	PAOZZ	74405	F1567-3-4	TUBE ASSY,METAL	1
9	PAOZZ	19207	7412088	WASHER,SHOULDERED A	2
10	PAOZZ	19207	5298653	SPACER,RING	2
11	PAOZZ	19207	5214539	WASHER,FLAT	1
12	PAOZZ	63477	5156653	ADAPTER,STRAIGHT,TU	1
13	PAOZZ	74405	F1567-3-2	TUBE ASSEMBLY,METAL MASTER CYLINDER TO REAR UNION	1
14	PAOZZ	96906	MS21333-34	CLAMP,LOOP TUBE	6
15	PAOZZ	96906	MS35206-281	SCREW,MACHINE	6
16	PAOZZ	96906	MS35691-53	NUT,PLAIN,HEXAGON	1
17	PAOZZ	96906	MS21045-6	NUT,SELF-LOCKING,HE	1
18	PAOZZ	19207	7745464	TEE,TUBE	2
19	PAOZZ	63477	7412079	BOLT,FLUID PASSAGE	2
20	PAOZZ	63477	F6222	HOSE ASSEMBLY,NONME	1

END OF FIGURE

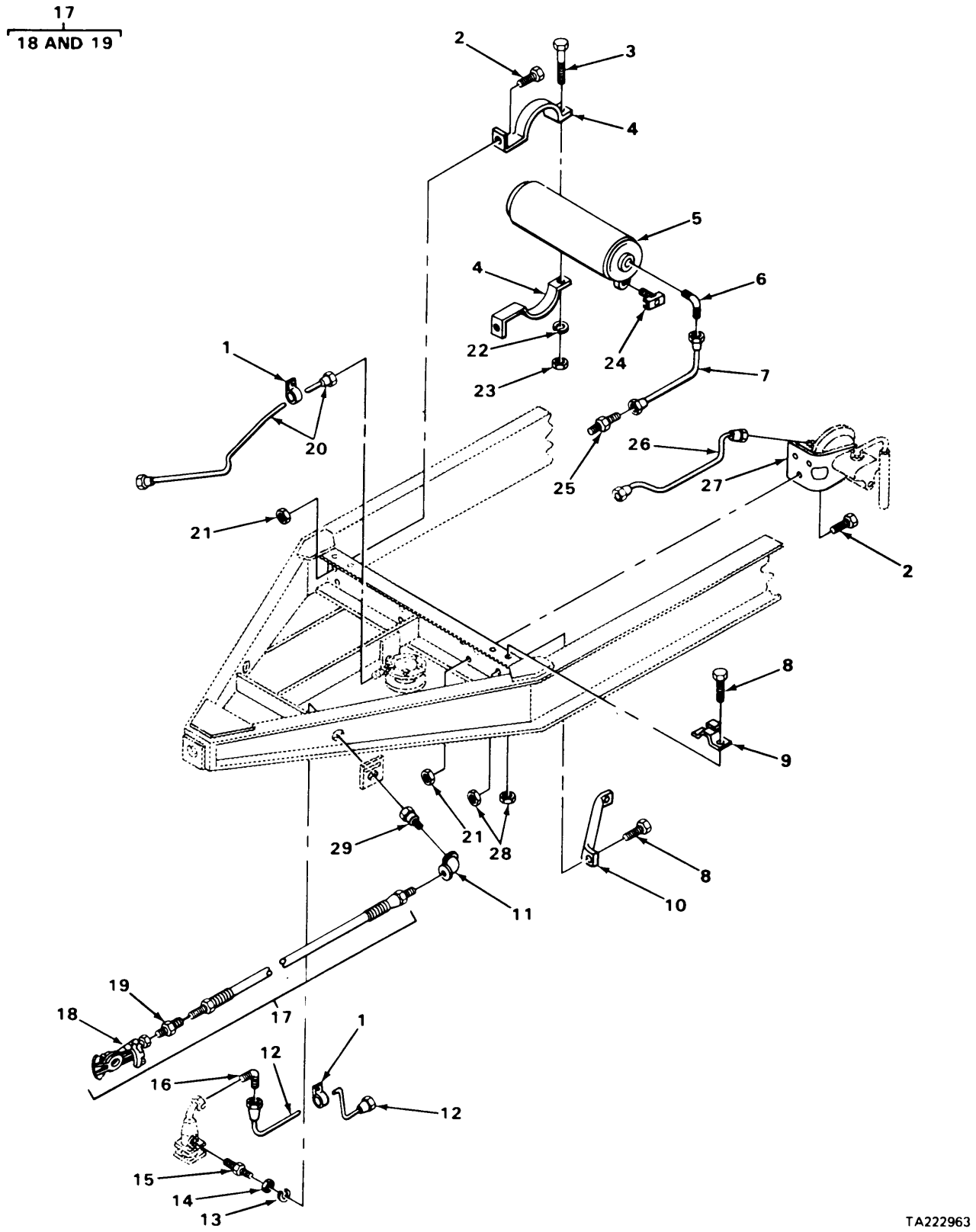

FIGURE 13. AIR BRAKE SYSTEM.

(1) ITEM NO	(2) SMR CODE	(3) FSCM	(4) PART NUMBER	(5) DESCRIPTION AND USABLE ON CODE (UOC)	(6) QTY
				1208 AIR BRAKE SYSTEM FIG. 13. AIR BRAKE SYSTEM	
1	PAOZZ	96906	MS21333-36	CLAMP,LOOP	2
2	PAOZZ	96906	MS90727-60	SCREW,CAP,HEXAGON H	7
3	PAOZZ	96906	MS90727-74	SCREW,CAP,HEXAGON H	2
4	PAOZZ	40342	N13008	STRAP,RETAINING	4
5	PAOZZ	23705	A298748	TANK,PRESSURE	1
6	PAOZZ	96906	MS39182-6	ELBOW,PIPE TO TUBE	1
7	PAOZZ	19207	8699511	LINE,RELAY VALVE	1
8	PAOZZ	96906	MS90726-34	BOLT,MACHINE	5
9	PFOZZ	19207	7979851	BRACKET,PIPE	2
10	XDOZZ	19207	10931736	SUPPORT	1
11	PAOZZ	96906	MS51845-4	ELBOW,PIPE	2
12	PAOZZ	19207	8699512	LINE,AIR FILTER TO COUPLING TO RELAY VALVE	1
13	PAOZZ	96906	MS35333-49	WASHER,LOCK	2
14	PAOZZ	30612	24569D	NUT,PLAIN,HEXAGON	2
15	PAOZZ	16662	AC2569	ADAPTER,STRAIGHT,PI UOC:C37	2
16	PAOZZ	96906	MS39182-3	ELBOW,PIPE TO TUBE	1
17	PAOZZ	23705	A298408	HOSE ASSEMBLY,NONME	2
18	PAOZZ	96906	MS35746-1	COUPLING HALF,QUICK	1
19	PFOZZ	96906	MS39133-2-B	ADAPTER,STRAIGHT,PI	1
20	PAOZZ	19207	8699510	LINE,AIR FILTER TO RELAY VALVE	1
21	PAOZZ	96906	MS21044N6	NUT,SELF-LOCKING,HE	7
22	PAOZZ	96906	MS35338-46	WASHER,LOCK	2
23	PAOZZ	96906	MS51968-8	NUT,PLAIN,HEXAGON	2
24	PAOZZ	96906	MS35782-5	COCK,DRAIN	1
25	PAOZZ	96906	MS39179-9	ADAPTER,STRAIGHT,PI RELAY VALVE TO RESERVOIR	1
26	PAOZZ	19207	8699513	LINE,RELAY VALVE TO AIR CHAMBER	1
27	PAOZZ	40342	N3550	BRACKET,MOUNTING	1
28	PAOZZ	96906	MS21044N5	NUT,SELF-LOCKING,HE	5
29	PAOZZ	40342	8330281	NIPPLE,PIPE	2
				END OF FIGURE	

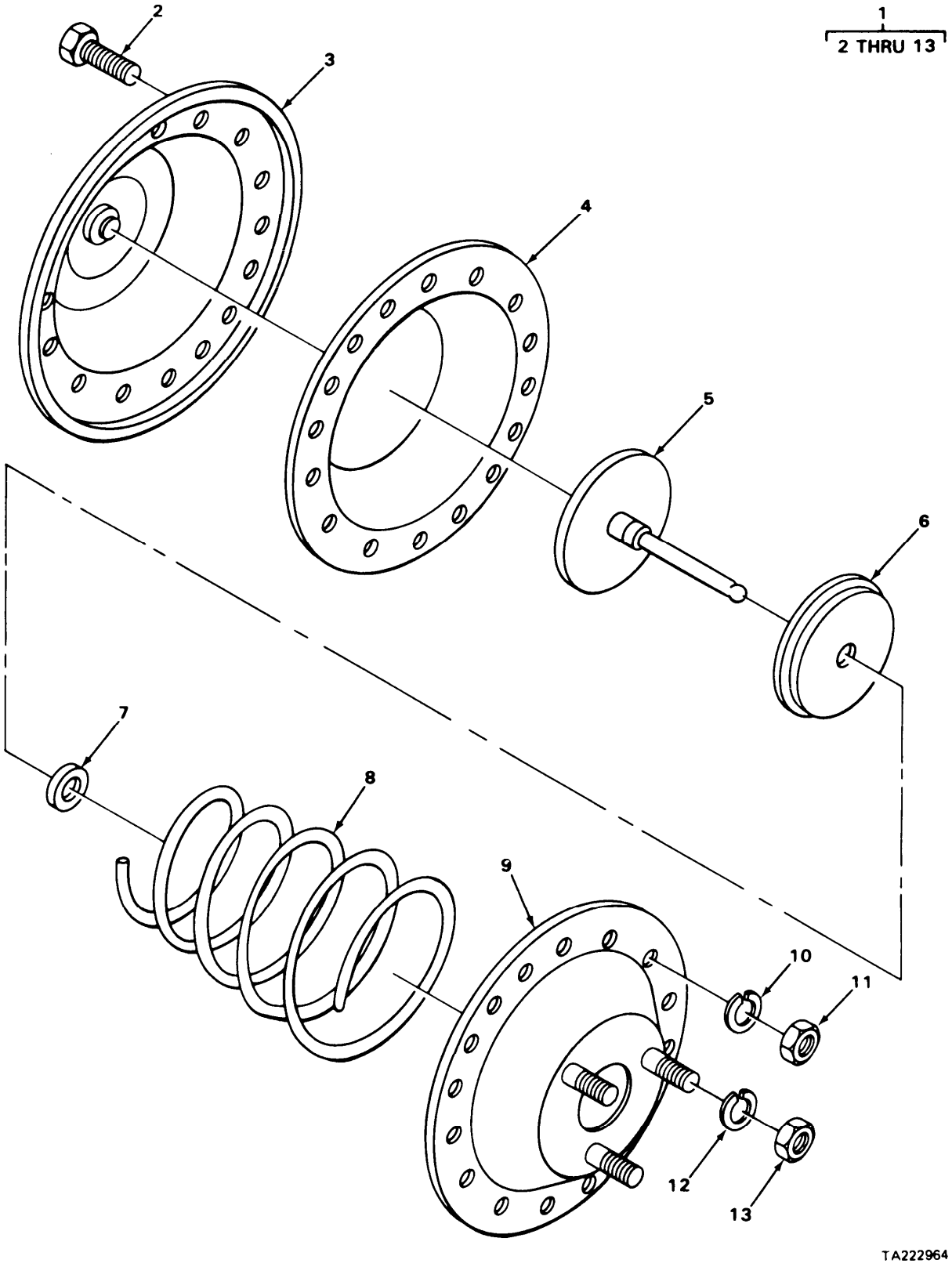

FIGURE 14. AIR CHAMBER ASSEMBLY.

(1) ITEM NO	(2) SMR CODE	(3) FSCM	(4) PART NUMBER	(5) DESCRIPTION AND USABLE ON CODE (UOC)	(6) QTY
				1208 AIR BRAKE SYSTEM FIG. 14. AIR CHAMBER ASSEMBLY	
1	PAOZZ	23075	A298320	CHAMBER,AIR BRAKE	1
2	PAOZZ	96906	MS90726-33	BOLT,MACHINE	16
3	PFOZZ	19207	7979602	COVER	1
4	PAOZZ	19207	7377783	DIAPHRAGM,CHAMBER,B	1
5	PFOZZ	19207	7979599	ROD,CHAMBER ASSEMBL	1
6	PAOZZ	19207	7979610	RETAINER,HELICAL CO	1
7	PAOZZ	96906	MS28775-012	PACKING,PREFORMED	1
8	PAOZZ	19207	7979608	SPRING,HELICAL,COMP	1
9	PAOZZ	97554	7979605	BODY ASSEMBLY,CHAMB	1
10	PAOZZ	96906	MS35338-45	WASHER,LOCK	16
11	PAOZZ	96906	MS51968-5	NUT,PLAIN,HEXAGON	16
12	PAOZZ	96906	MS35338-46	WASHER,LOCK	3
13	PFOZZ	96906	MS51967-8	NUT,PLAIN,HEXAGON	3
				END OF FIGURE	

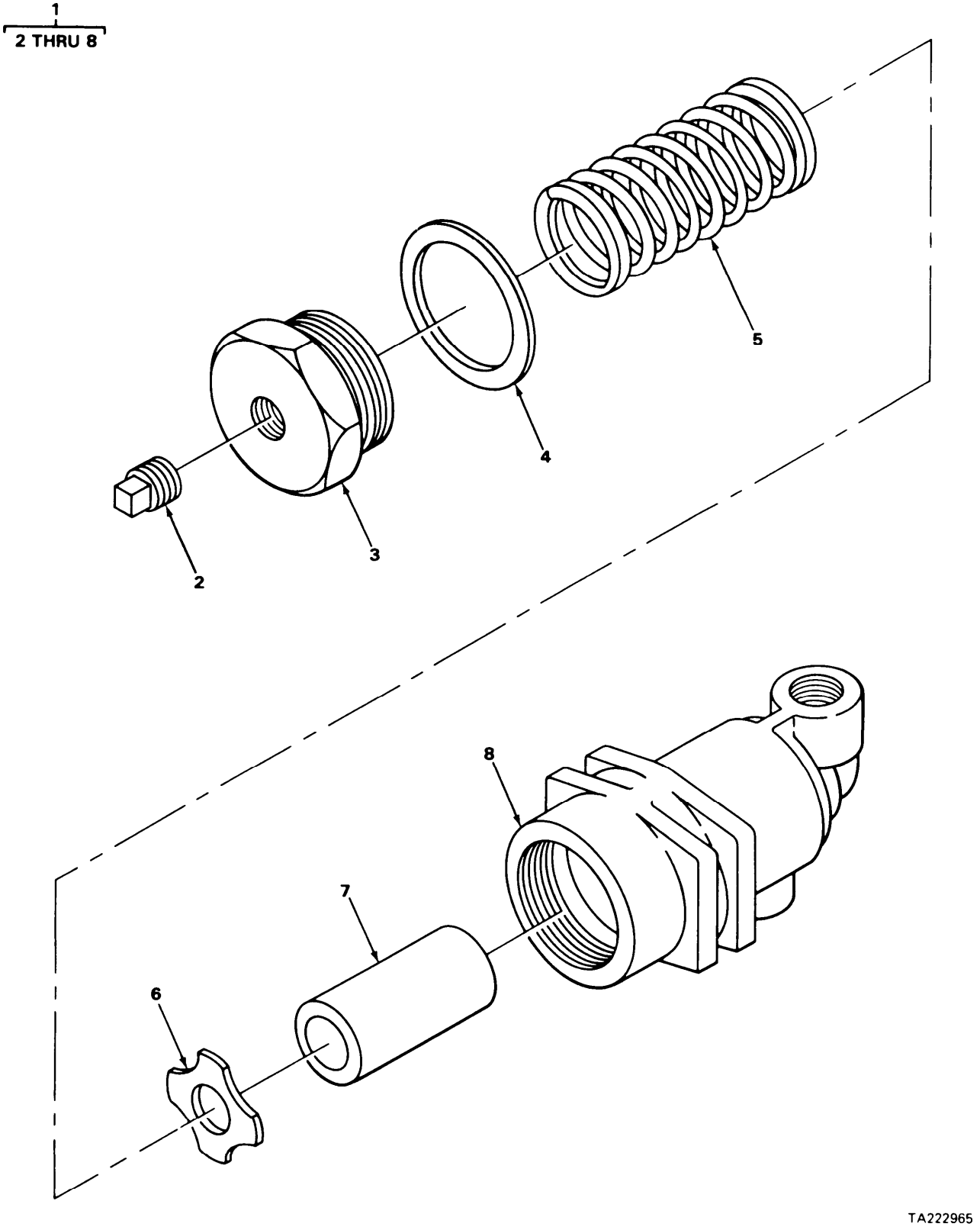

FIGURE 15. AIR FILTER,

(1) ITEM NO	(2) SMR CODE	(3) FSCM	(4) PART NUMBER	(5) DESCRIPTION AND USABLE ON CODE (UOC)	(6) QTY
				1208 AIR BRAKE SYSTEM FIG. 15. AIR FILTER	
1	PAOZZ	23705	A298749	AIR FILTER,BRAKE LI	2
2	PAOZZ	96906	MS20913-1S	PLUG,PIPE	1
3	PAOZZ	06853	235091	ADAPTER BUSHING	1
4	PAOZZ	91340	M4X509	GASKET PART OF KIT P/N 10130	1
5	PAOZZ	06853	235093	SPRING,HELICAL,COMP	1
6	PAOZZ	40342	N12972	WASHER,SPRING TENSI	1
7	PAOZZ	23705	N12971	FILTER ELEMENT,FLUI PART OF KIT P/N 10130	1
8	PAOZZ	40342	N-12970-A	ELBOW BODY,AIR LINE	1
				END OF FIGURE	

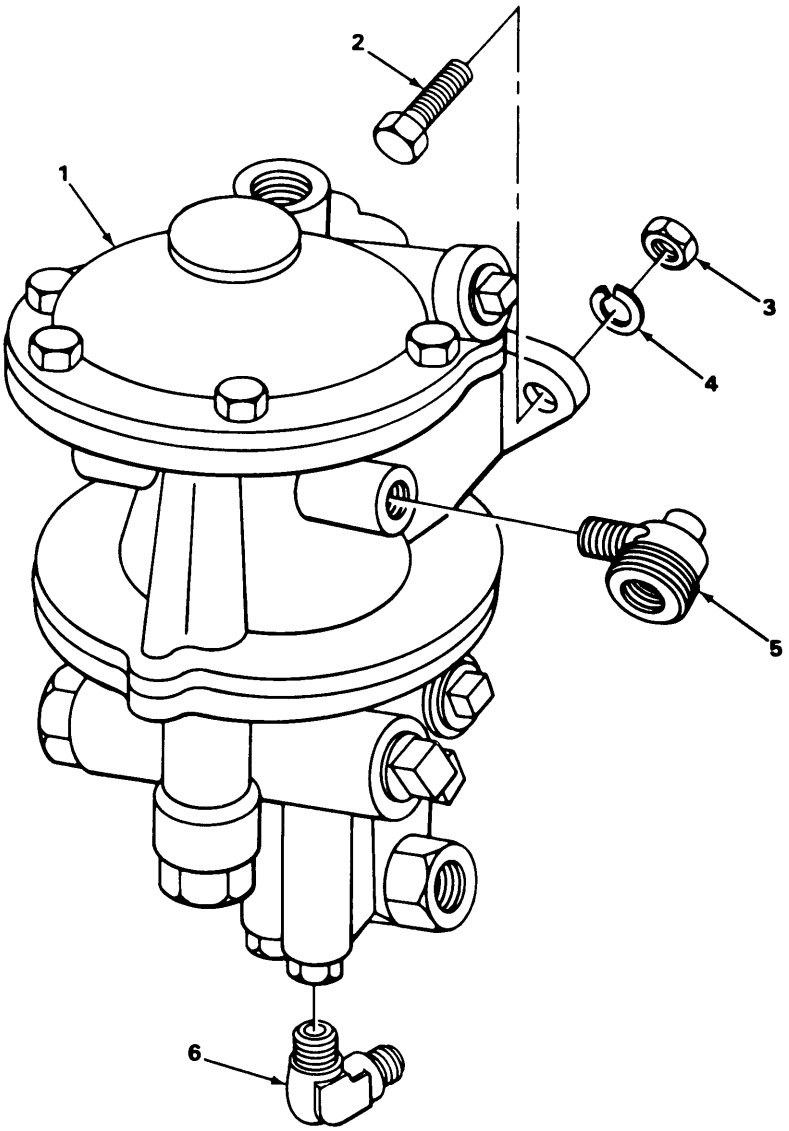

TA222966

FIGURE 16. EMERGENCY RELAY VALVE.

(1) ITEM NO	(2) SMR CODE	(3) FSCM	(4) PART NUMBER	(5) DESCRIPTION AND USABLE ON CODE (UOC)	(6) QTY
				1208 AIR BRAKE SYSTEM FIG. 16. EMERGENCY RELAY VALVE	
1	PAOZZ	96906	MS53004-2	PARTS KIT,RELAY VAL	1
2	PAOZZ	96906	MS18153-61	SCREW,CAP,HEXAGON H	2
3	PAOZZ	96906	MS21044N6	NUT,SELF-LOCKING,HE	2
4	PAOZZ	96906	MS35338-46	WASHER,LOCK	2
5	PAOZZ	19207	7979297	VALVE,CHECK	2
6	PAOZZ	96906	MS39182-5	ELBOW,PIPE TO TUBE	1

END OF FIGURE

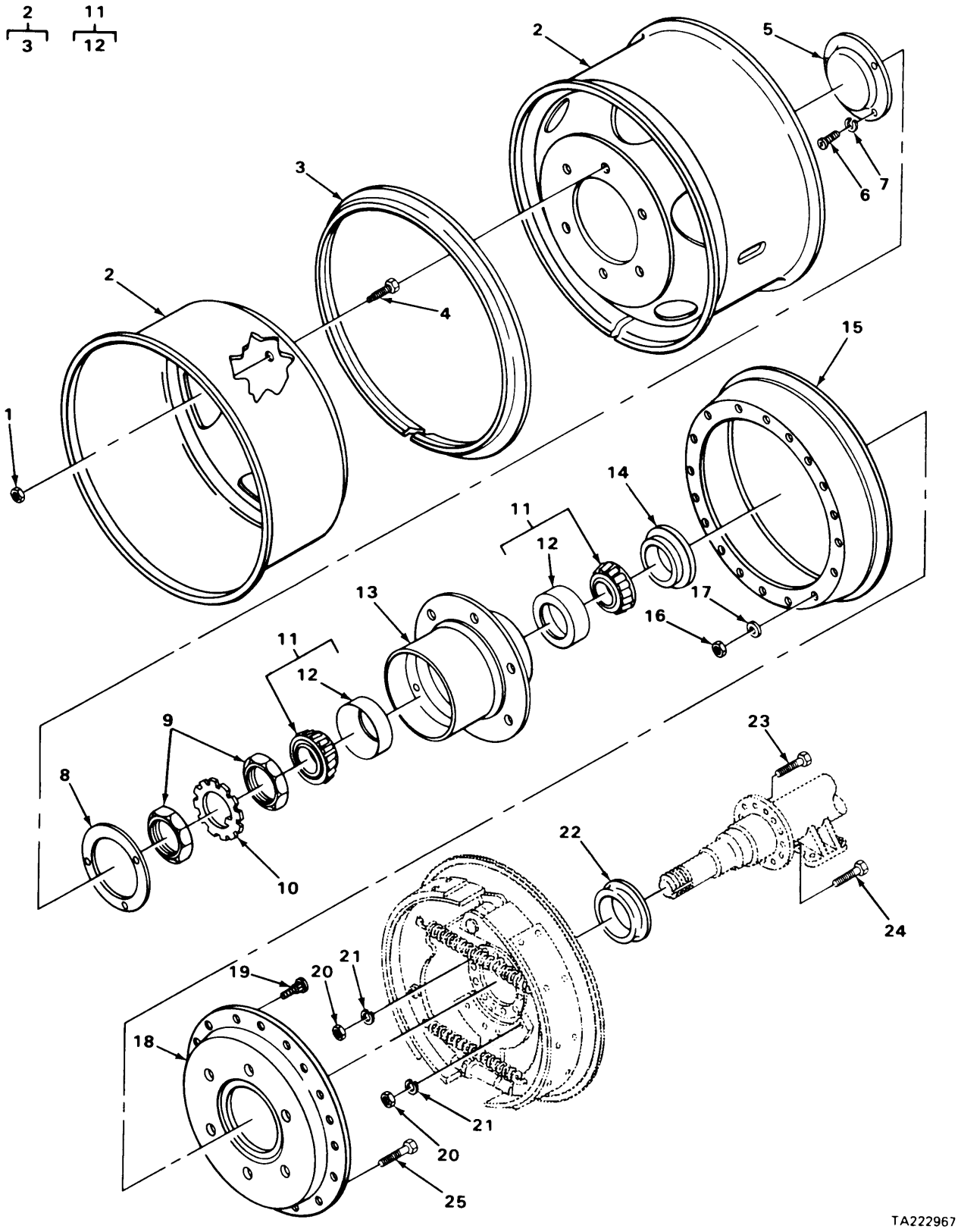

FIGURE 17. HUB AND DRUM ASSEMBLY.

(1) ITEM NO	(2) SMR CODE	(3) FSCM	(4) PART NUMBER	(5) DESCRIPTION AND USABLE ON CODE (UOC)	(6) QTY
				GROUP 13 WHEELS, HUBS AND DRUMS 1311 WHEELS, HUBS AND DRUMS FIG. 17. HUB AND DRUM ASSEMBLY	
1	PAOZZ	96906	MS51983-4	NUT,PLAIN,SINGLE BA RIGHT HAND	6
1	PAOZZ	96906	MS51983-3	NUT,PLAIN,SINGLE BA LEFT HAND	6
2	PAOZZ	96906	MS53044-5	WHEEL,PNEUMATIC TIR	4
3	PAOZZ	96906	MS53045-3	RING,SIDE,AUTOMOTIV	1
4	PAOZZ	96906	MS53068-1	NUT,CAP,DUAL WHEEL	6
4	PAOZZ	96906	MS53068-2	NUT,CAP,DUAL WHEEL RIGHT HAND	6
5	PAOZZ	19204	6144454	CAP	2
6	PAOZZ	96906	MS35206-279	SCREW,MACHINE	6
7	PAOZZ	96906	MS35338-44	WASHER,LOCK	6
8	PAOZZ	19207	10910885	GASKET	1
9	PAOZZ	19207	7411379	NUT,PLAIN,OCTAGON	4
10	PAOZZ	19207	7411378	WASHER,KEY	2
11	PAOZZ	96906	MS19081-112	BEARING,ROLLER,TAPE	4
12	PAOZZ	19207	7411377	CUP,TAPERED ROLLER	1
13	PAOZZ	19207	7263712	HUB,BODY	2
14	PAOZZ	19207	7411429	SEAL,PLAIN ENCASED	2
15	PAOZZ	24617	2284031	BRAKE DRUM	2
16	PAOZZ	09386	67428E2	NUT,SELF,LOCKING,HE	36
17	PAOZZ	96906	MS27183-14	WASHER,FLAT	36
18	PAOZZ	19207	7413231	BACK FRONT BRAKE DR	2
19	PAOZZ	96906	MS51946-1	BOLT,RIBBED SHOULDE LEFT HAND	6
19	PAOZZ	96906	MS51946-2	BOLT,RIBBED SHOULDE RIGHT HAND	6
20	PAOZZ	96906	MS51968-8	NUT,PLAIN,HEXAGON	24
21	PAOZZ	96906	MS35335-35	WASHER,LOCK	24
22	PAOZZ	23862	2275698	SPACER,SLEEVE HUB INNER OIL SEAL	2
23	PAOZZ	96906	MS90726-60	SCREW,CAP,HEXAGON H	8
24	PAOZZ	96906	MS90727-64	SCREW,CAP,HEXAGON H	16
25	PFOZZ	18876	8720025	BOLT,RIBBED NECK	36
				END OF FIGURE	

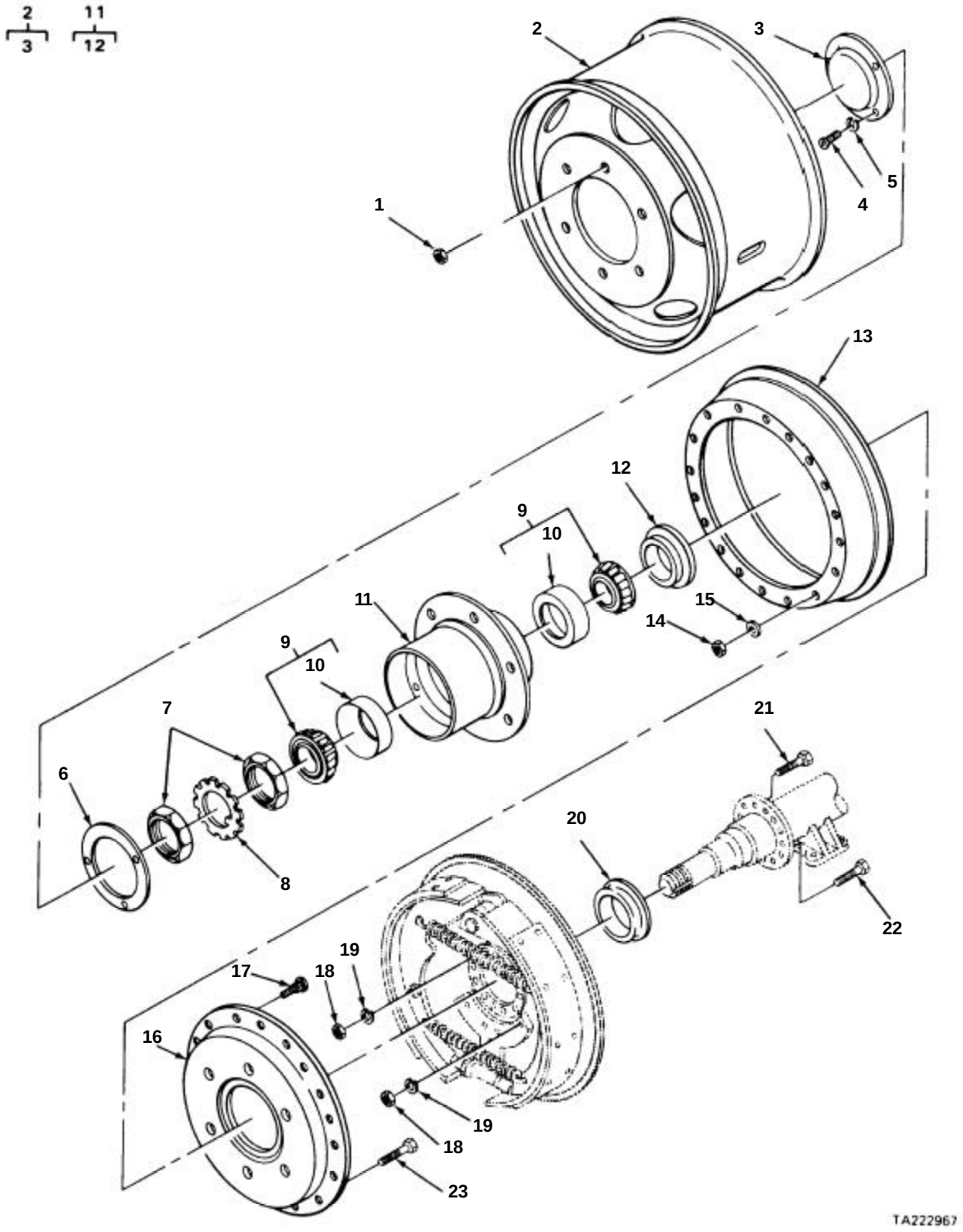

FIGURE 17A. HUB AND DRUM ASSEMBLY

FOR USE WITH SUPER SINGLE STYLE

(1) ITEM NO	(2) SMR CODE	(3) FSCM	(4) PART NUMBER	(5) DESCRIPTION AND USABLE ON CODE (UOC)	(6) QTY
				GROUP 13 WHEELS, HUBS AND DRUMS	
				1311 WHEELS, HUBS AND DRUMS	
				FIG. 17. HUB AND DRUM ASSEMBLY	
1	PAOZZ	02686	129378	NUT,WHEEL,FLANGED,RIGHT HAND	12
2	PAOZZ	7J015	1050110	WHEEL,PNEUMATIC TIR	2
3	PAOZZ	19204	6144454	CAP	2
4	PAOZZ	96906	MS35206-279	SCREW,MACHINE	6
5	PAOZZ	96906	MS35338-44	WASHER,LOCK	6
6	PAOZZ	19207	10910885	GASKET	1
7	PAOZZ	19207	7411379	NUT,PLAIN,OCTAGON	4
8	PAOZZ	19207	7411378	WASHER,KEY	2
9	PAOZZ	96906	MS19081-112	BEARING,ROLLER,TAPE	4
10	PAOZZ	19207	7411377	.CUP,TAPERED ROLLER	1
11	PAOZZ	19207	11682127-1	HUB,BODY	2
12	PAOZZ	19207	7411429	SEAL,PLAIN ENCASED	2
13	PAOZZ	24617	2284031	BRAKE DRUM	2
14	PAOZZ	09386	67428E2	NUT,SELF,LOCKING,HE	36
15	PAOZZ	96906	MS27183-14	WASHER,FLAT	36
16	PAOZZ	19207	7413231	BACK FRONT BRAKE DR	2
17	PAOZZ	7J015	MS51946-2	BOLT,RIBBED SHOULDER, RIGHT HAND	12
18	PAOZZ	96906	MS51968-8	NUT,PLAIN,HEXAGON	24
19	PAOZZ	96906	MS35335-35	WASHER,LOCK	24
20	PAOZZ	23862	2275698	SPACER,SLEEVE HUB INNER OIL SEAL	2
21	PAOZZ	96906	MS90726-60	SCREW,CAP,HEXAGON H	8
22	PAOZZ	96906	MS90727-64	SCREW,CAP,HEXAGON H	16
23	PFOZZ	18876	8720025	BOLT,RIBBED NECK	36
				END OF FIGURE	

FOR USE WITH SUPER SINGLE STYLE

Tire and wheel assy:
2530-01-506-5910
9.00-20 tire style

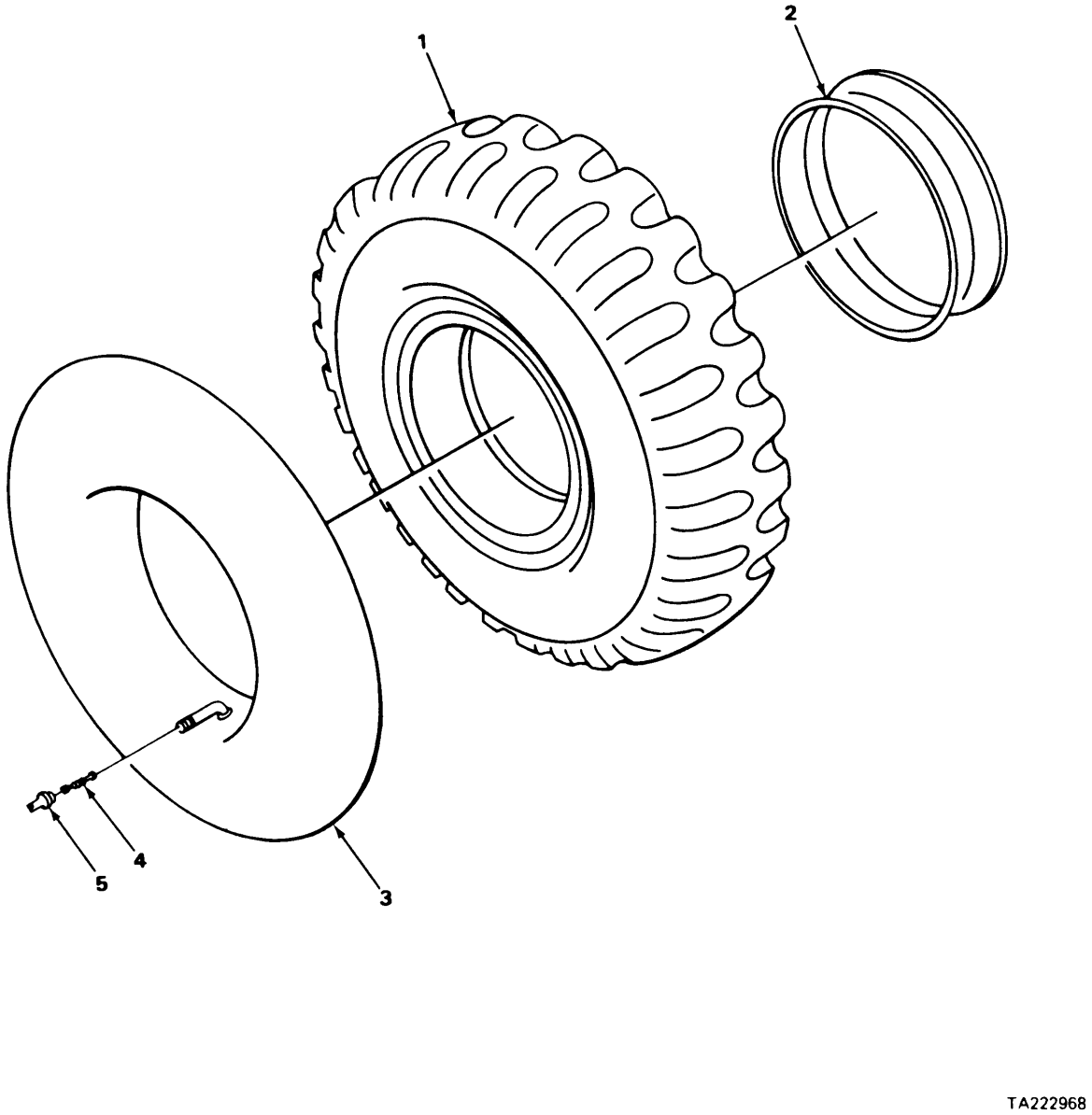

FIGURE 18. TIRE AND TUBE.

(1) ITEM NO	(2) SMR CODE	(3) FSCM	(4) PART NUMBER	(5) DESCRIPTION AND USABLE ON CODE (UOC)	(6) QTY
				1313 TIRES AND TUBES FIG. 18. TIRE AND TUBE	
1	PAOFF	81348	ZZ-T-381M/GROUP 3/9.00-20/D/TBCC	TIRE,PNEUMATIC	4
2	PAOZZ	73808	20R	FLAP,INNER TUBE,PNE	4
3	PAOZZ	18990	BG26332	INNER TUBE,PNEUMATI	4
4	PAOZZ	17875	100AA	VALVE CORE	4
5	PAOZZ	96906	MS51375-1	CAP,PNEUMATIC VALVE	4

END OF FIGURE

Tire and wheel assy
2530-01-528-9461
10.00R22.5 tire style

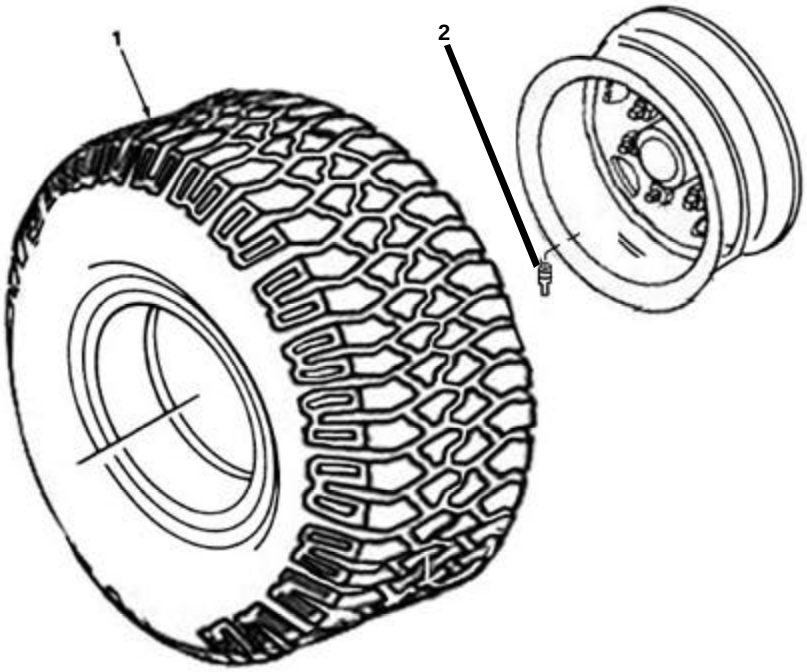

FOR USE WITH SUPER SINGLE STYLE

FIGURE 18A. TIRE.

(1) ITEM NO	(2) SMR CODE	(3) FSCM	(4) PART NUMBER	(5) DESCRIPTION AND USABLE ON CODE (UOC)	(6) QTY
				1313 TIRES AND TUBES FIG. 18A. TIRE AND TUBE	
1	PAOFF	81348	G186.10R22.5	TIRE,PNEUMATIC	2
2	PAOZZ	7J015	1050111	VALVE STEM	2

END OF FIGURE

Tire 2610-01-063-7947
10.00R22.5

FOR USE WITH SUPER SINGLE STYLE

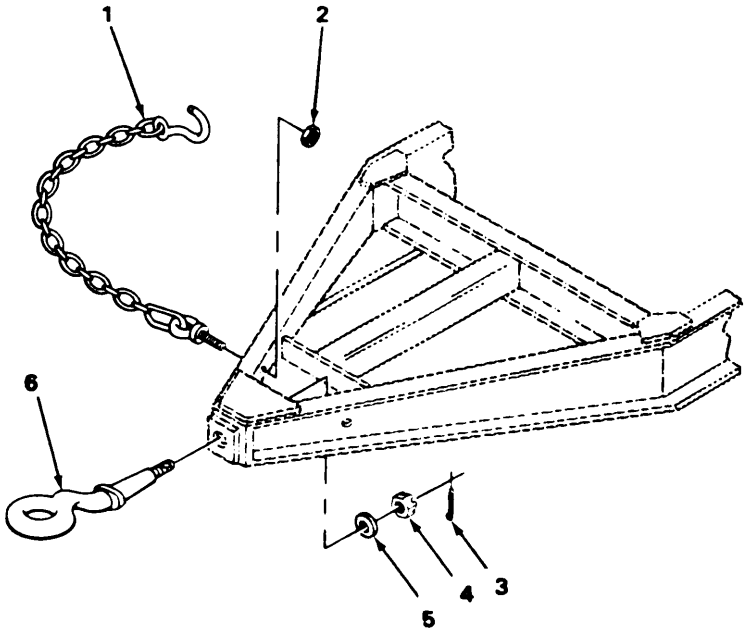

FIGURE 19. LUNETTE, SAFETY CHAINS

(1) ITEM NO	(2) SMR CODE	(3) FSCM	(4) PART NUMBER	(5) DESCRIPTION AND USABLE ON CODE (UOC)	(6) QTY
				GROUP 15 FRAME AND TOWING ATTACHMENTS	
				1503 TOWING ATTACHMENTS	
				FIG. 19. LUNETTE, SAFETY CHAINS	
1	PAOZZ	19207	12461851-12	CHAIN ASSEMBLY	2
2	PAOZZ	96906	MS51922-49	NUT,SELF-LOCKING,HE	2
3	PAOZZ	96906	MS90728-167	SCREW,CAP,HEXAGON H	12
3	PFOZZ	96906	MS24665-498	PIN,COTTER	1
4	PAOZZ	19207	7411028	NUT,PLAIN,SLOTTED,H	1
4	PAOZZ	19207	8699518	ADAPTER,TOWING ATTA RIGHT HAND	1
4	PAOZZ	19207	8742385	ADAPTER ASSY,SPRING LEFT HAND	1
5	PAOZZ	19207	8699517	PIN,STRAIGHT,HEADLE	2
5	PAOZZ	24617	446284	WASHER,FLAT	1
6	PAOZZ	96906	MS51922-49	NUT,SELF-LOCKING,HE	12
6	PAOZZ	96906	MS51339-3	COUPLER,DRAWBAR,RIN	1
				END OF FIGURE	

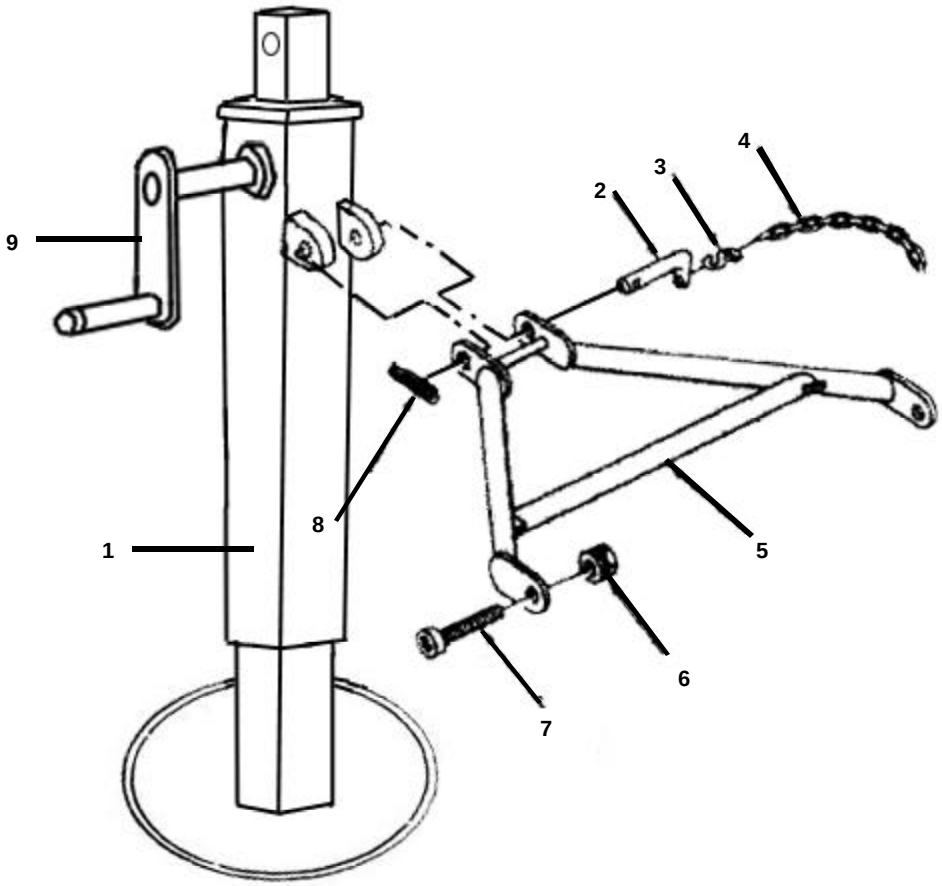

FIGURE 20 . LANDING LEG ASSEMBLY.

(1) ITEM NO	(2) SMR CODE	(3) FSCM	(4) PART NUMBER	(5) DESCRIPTION AND USABLE ON CODE (UOC)	(6) QTY
				1507 LANDING GEAR AND LEVELING JACKS FIG. 20. LANDING LEG ASSEMBLY	
1	PAOZZ	19207	12476168	SUPPORT,RETRACTABLE	1
2	PAOZZ	19207	7392875	PIN,LANDING LEG	1
3	PAOZZ	96906	MS87006-41	HOOK,CHAIN,S	2
4	PAOZZ	19207	820070	CHAIN,WELDLESS	2
5	PBOZZ	19207	12476134	BRACE,LANDING LEG	1
6	PAOZZ	96906	MS51922-33	NUT,SELF-LOCKING,HE	2
7	PAOZZ	96906	MS90728-114	SCREW,CAP,HEXAGON H	2
8	PAOZZ	19207	8343436	PIN,LOCK	1
9	PAOZZ	19207	12476152	ASSEMBLY, HANDLE, CRANK	1
				END OF FIGURE	

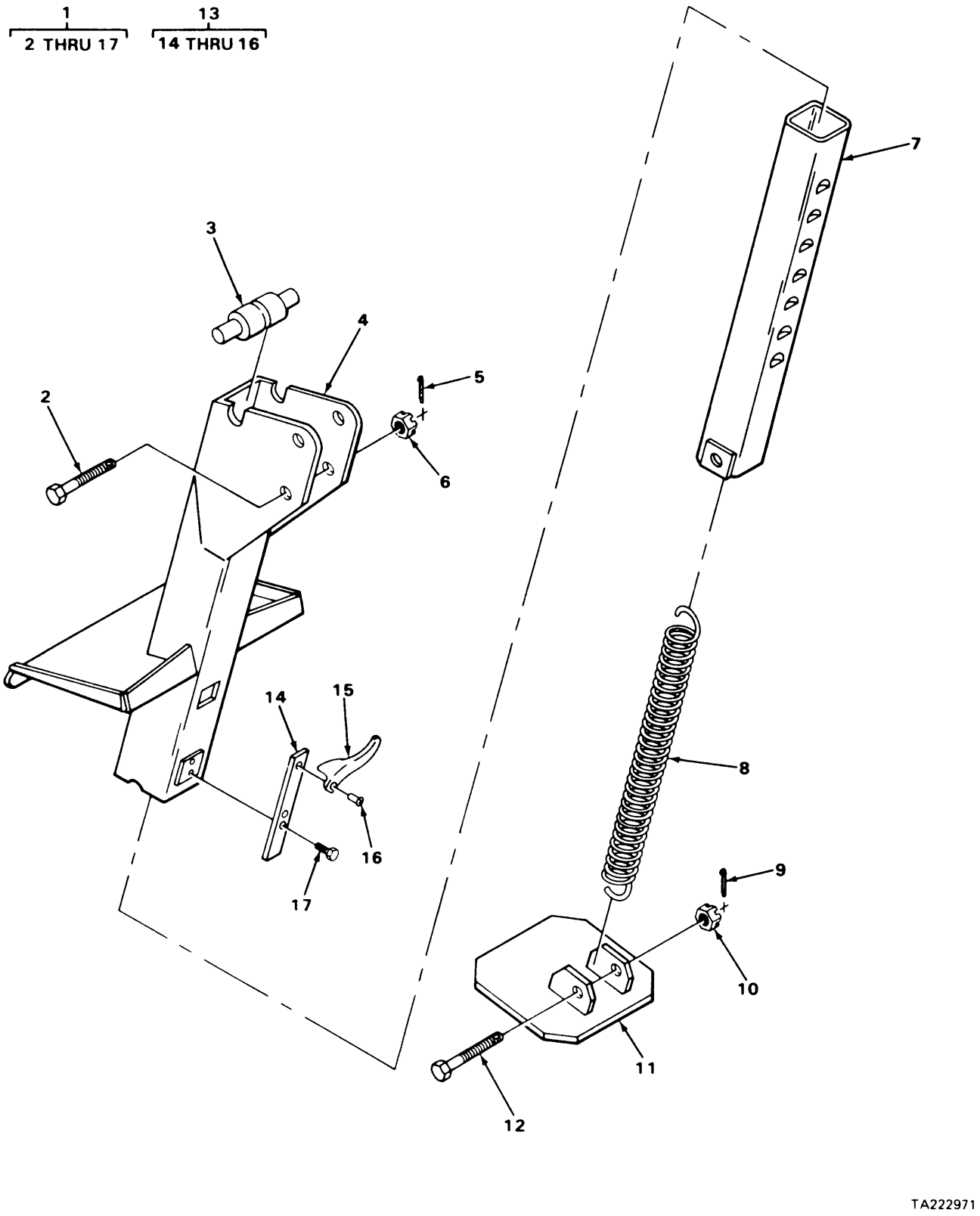

FIGURE 21. STEP JACK ASSEMBLY.

(1) ITEM NO	(2) SMR CODE	(3) FSCM	(4) PART NUMBER	(5) DESCRIPTION AND USABLE ON CODE (UOC)	(6) QTY
				1507 LANDING GEAR AND LEVELING JACKS FIG. 21. STEP JACK ASSEMBLY	
1	PAOFF	19207	8699545	JACK,LEVELING-SUPPO	2
2	PAOZZ	19207	7392852	BOLT,MACHINE	1
3	PAFZZ	19207	7392808	PIN,SHOULDER,HEADLE	1
4	XAFZZ	19207	8699546	STEP	1
5	PAOZZ	96906	MS24665-285	PIN,COTTER	1
6	PAOZZ	81348	FF8571TYPEA	NUT,CASTELLATED,HEX	1
7	XDFZZ	19207	8699535	TUBE,ASSEMBLY	1
8	PFFZZ	19207	7392850	SPRINGX	1
9	PAFZZ	96906	MS24665-285	PIN,COTTER	1
10	PFFZZ	96906	MS51967-11	NUT,PLAIN,HEXAGON	1
11	XDFZZ	19207	8699536	PAD ASSEMBLY	1
12	PAFZZ	19207	7392851	BOLT,MACHINE	1
13	PAFZZ	19207	8699580	LATCH,JACK ASSEMBLY	1
14	PFFZZ	19207	7392809	SPRINGX	1
15	PAFZZ	19207	7392849	LATCH,JACK	1
16	PAFZZ	96906	MS35743-3	RIVET,SOLID	1
17	PAFZZ	96906	MS35207-277	SCREW,MACHINE	2
				END OF FIGURE	

14
15

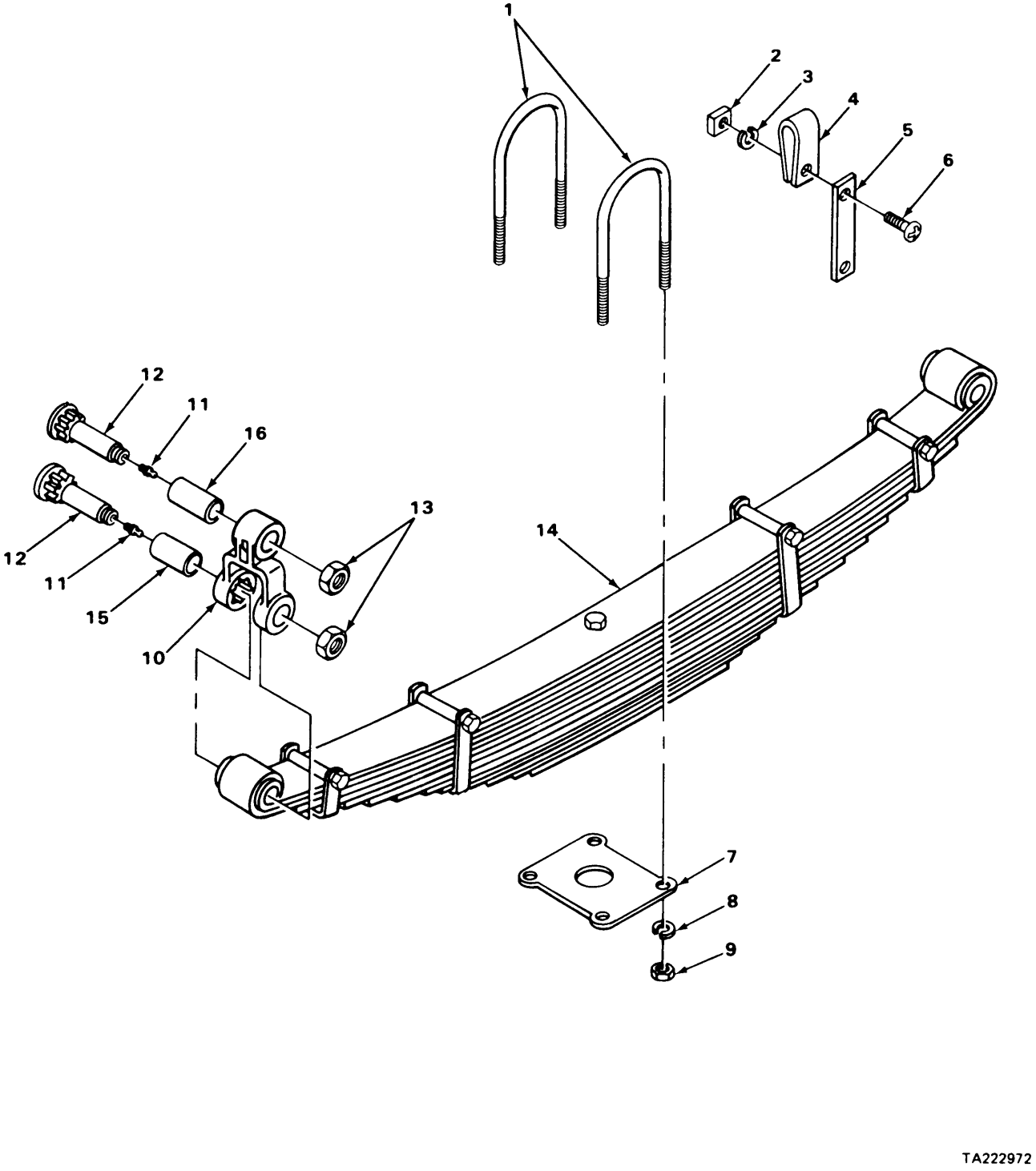

FIGURE 22. SPRING ASSEMBLY.

(1) ITEM NO	(2) SMR CODE	(3) FSCM	(4) PART NUMBER	(5) DESCRIPTION AND USABLE ON CODE (UOC)	(6) QTY
				GROUP 16 SPRINGS AND SHOCK ABSORBERS	
				1601 SPRINGS	
				FIG. 22. SPRING ASSEMBLY	
1	PAOZZ	19207	7392813	BOLT,O	4
2	XDOZZ	81348	FFN836GPCTYPE1ST LE31-4-2ONUTPLAI	NUT,PLAIN,SQUARE	2
3	PAOZZ	96906	MS35338-44	WASHER,LOCK	2
4	PAOZZ	96906	MS21333-37	CLAMP,LOOP	2
5	XDOZZ	19207	8699504	BRACKET	2
6	PAOZZ	96906	MS35206-281	SCREW,MACHINE	2
7	XDOZZ	19207	7392811	PLATE	2
8	PAOZZ	96906	MS35338-51	WASHER,LOCK	8
9	PAOZZ	19207	7411041	NUT,PLAIN,HEXAGON	8
10	PAOZZ	19207	7392812-1	SHACKLE,LEAF SPRING	2
11	PAOZZ	96906	MS15003-1	FITTING,LUBRICATION	6
12	PAOZZ	19207	7392817	BOLT,SHACKLE	6
13	PFOZZ	96906	MS21083N14	NUT,SELF-LOCKING,HE	6
14	PAOZZ	19207	7392819	SPRING ASSEMBLY,LEA WITH BUSHINGS	2
15	PAOZZ	19207	542048	BEARING,SLEEVE	2
16	PAOZZ	19207	542048	BEARING,SLEEVE	2
				END OF FIGURE	

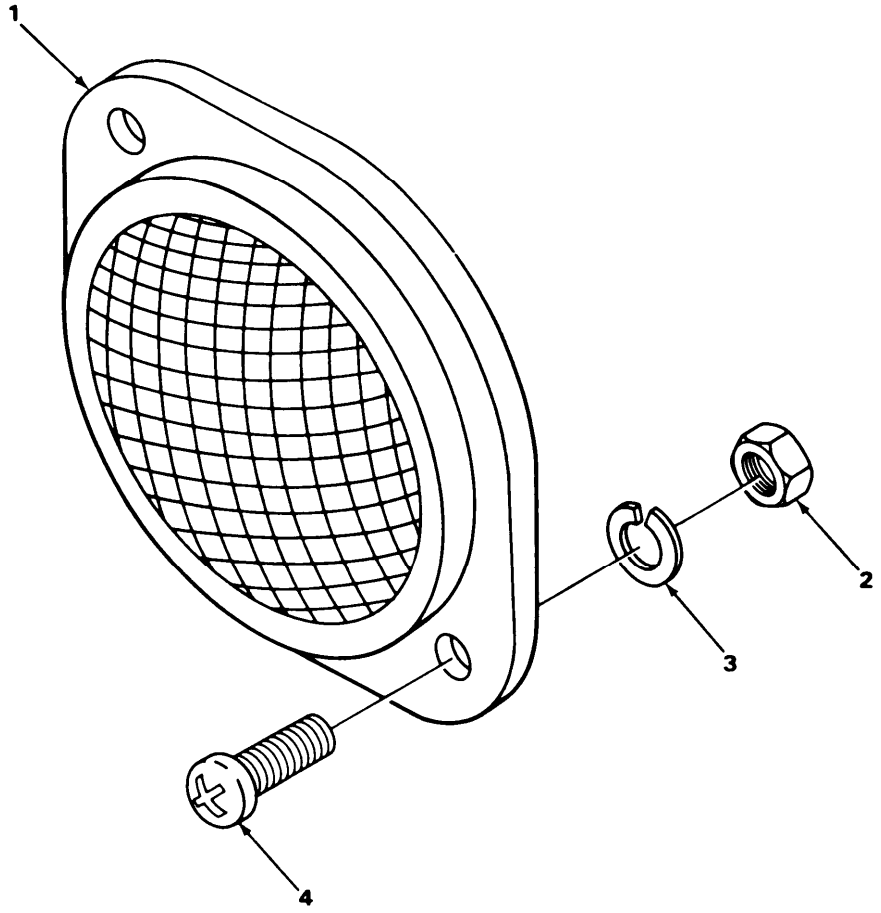

TA222973

FIGURE 23. REFLECTORS.

(1) ITEM NO	(2) SMR CODE	(3) FSCM	(4) PART NUMBER	(5) DESCRIPTION AND USABLE ON CODE (UOC)	(6) QTY
				GROUP 22 BODY AND ACCESSORY ITEMS	
				2202 ACCESSORY ITEMS	
				FIG. 23. REFLECTORS	
1	PAOZZ	96906	MS35387-1	REFLECTOR,INDICATIN RED	4
1	PAOZZ	96906	MS35387-2	REFLECTOR,INDICATIN AMBER	2
2	PFOZZ	96906	MS51967-2	NUT,PLAIN,HEXAGON	12
3	PAOZZ	96906	MS35338-44	WASHER,LOCK	12
4	PAOZZ	96906	MS35206-281	SCREW,MACHINE	12
				END OF FIGURE	

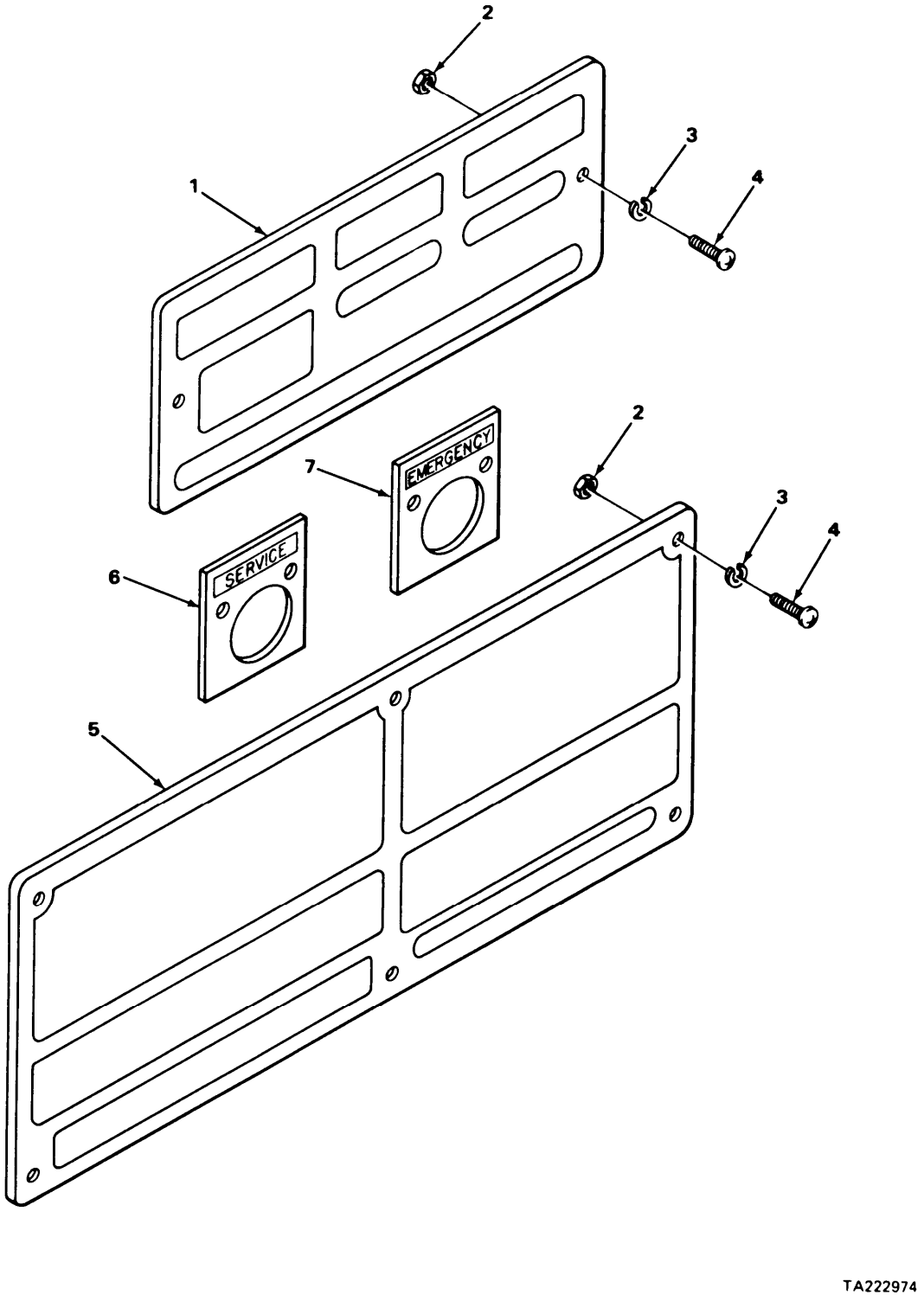

FIGURE 24. IDENTIFICATION PLATES.

(1) ITEM NO	(2) SMR CODE	(3) FSCM	(4) PART NUMBER	(5) DESCRIPTION AND USABLE ON CODE (UOC)	(6) QTY
				2210 DATA AND INSTRUCTION PLATES FIG. 24. IDENTIFICATION PLATES	
1	PAOZZ	19207	7979373	PLATE,IDENTIFICATIO	1
2	PAOZZ	96906	MS35649-202	NUT,PLAIN,HEXAGON	8
3	PAOZZ	94135	43W6335-40	WASHER,LOCK	8
4	PAOZZ	96906	MS35206-263	SCREW,MACHINE	8
5	PAOZZ	19207	8742396-1	PLATE,IDENTIFICATIO	1
				WEIGHT AND DEMENSION	
5	PAOZZ	19207	12331775	PLATE,IDENTIFICATIO	1
				TIEDOWN AND LIFTING	
6	PAOZZ	96906	MS53007-1	PLATE,IDENTIFICATIO SERVICE	1
7	PAOZZ	96906	MS53007-2	PLATE,IDENTIFICATIO EMERGENCY	1

END OF FIGURE

(1) ITEM NO	(2) SMR CODE	(3) FSCM	(4) PART NUMBER	(5) DESCRIPTION AND USABLE ON CODE (UOC)	(6) QTY
				GROUP 94 KITS	
				9401 KITS	
1	PAOZZ	53335	10130	PARTS KIT,FLUID PRE	
				FILTER ELEMENT,FLUI(1) 15-7	
				GASKET (1) 15-4	
2	PAOZZ	19204	7550526	TOOL KIT,ELECTRICAL	1
				CONTACT,ELECTRICAL (6) 6-2	
				CONTACT,ELECTRICAL (6) 5-2	
				INSULATOR,BUSHING (8) 6-6	
				INSULATOR,BUSHING (7) 5-6	
				SHELL,ELECTRICAL CO(6) 6-4	
				SHELL,ELECTRICAL CO(8) 6-5	
				SHELL,ELECTRICAL CO(6) 5-4	
				SHELL,ELECTRICAL CO(7) 5-5	
				TERMINAL ASSEMBLY (8) 6-7	
				TERMINAL ASSEMBLY (7) 5-7	
				WASHER,SLOTTED (6) 6-3	
				WASHER,SLOTTED (6) 5-3	

END OF FIGURE

CROSS-REFERENCE INDEXES

NATIONAL STOCK NUMBER INDEX

STOCK NUMBER	FIG.	ITEM	STOCK NUMBER	FIG.	ITEM
5315-00-005-0442	21	5	5305-00-269-3240	17	24
	21	9	2530-00-200-1286	7	1
5320-00-011-9951	9	11	9905-00-202-3639	23	1
	9	38	2530-00-204-4800	10	5
5310-00-013-4551	12	1		10	8
6240-00-019-0877	1	5	9905-00-205-2795	23	1
	2	4	4730-00-221-2136	15	2
	3	7	5310-00-225-6993	20	6
6240-00-019-3093	3	5	5306-00-225-8496	11	12
2530-00-021-2366	16	1	5306-00-225-9084	1	8
5310-00-021-9760	13	14	5306-00-225-9088	14	2
	17A	2	5306-00-225-9089	13	8
5310-00-044-6284	19	5	5306-00-226-4829	8	7
6240-00-044-6914	2	5	4010-00-228-9977	20	4
	3	6	5330-00-246-8223	17A	6
5310-00-045-3299	4	11	4730-00-249-3885	13	11
2640-00-050-1229	18	4		18A	1
4730-00-050-4208	22	11	5305-00-267-8974	9	54
5999-00-057-2929	5	2	5305-00-269-2803	9	46
	6	2		17A	21
2640-00-060-3550	18	5		17	23
5310-00-061-1258	3	2	5305-00-269-2807	9	65
4730-00-065-0718	10	9	5305-00-269-3208	3	1
4730-00-069-1186	13	15	5305-00-269-3236	13	2
4730-00-069-1187	13	16	5305-00-269-3240	17A	22
2530-00-026-0265	17	2	5305-00-269-3250	13	3
2530-00-074-2357	9	7	5310-00-269-4040	19	2
5310-00-080-6004	17A	15		19	6
5310-00-080-6004	17	17	5365-00-274-4544	12	10
5310-00-087-4652	8	5	5310-00-274-8710	24	3
5310-00-088-0553	13	28	5340-00-275-6042	4	1
3110-00-100-5951	17A	9	5310-00-275-6635	11	4
5305-00-115-9526	2	8		12	11
4730-00-142-3076	13	25	4730-00-278-8886	12	4
3110-00-143-7586	17A	10	9905-00-282-7489	24	1
3040-00-150-7127	9	7	5340-00-282-7515	22	4
	18A	2	5340-00-282-7519	12	14
2530-00-159-8755	9	27	5330-00-285-5123	15	4
2530-00-159-8756	9	31	2610-00-262-8677	18	1
5310-00-167-0721	9	17	5340-00-286-2494	13	1
2510-00-177-7806	19	4	4730-00-289-0051	13	6
3110-00-100-5951	17	11	4730-00-289-0155	16	6
3110-00-143-7586	17	12	2530-00-293-5139	14	1
2540-00-177-8119	19	4	5330-00-246-8223	17	8
	20	5	5330-00-297-7106	2	3
5340-00-178-1441	14	6	5310-00-314-0764	9	6
6220-00-179-4324	3	9		9	42
2640-00-158-5617	18	2	5310-00-314-0765	9	5
				9	43
2530-00-192-8928	14	9	2590-00-317-3137	21	1

CROSS-REFERENCE INDEXES

NATIONAL STOCK NUMBER INDEX

STOCK NUMBER	FIG.	ITEM	STOCK NUMBER	FIG.	ITEM
5310-00-322-7260	9	4	2590-00-611-7883	6	12
	9	44	5306-00-613-2011	22	1
5315-00-322-7261	9	3	2510-00-613-2012	22	12
	9	40	2510-00-613-2013	22	14
3040-00-330-3262	8	1		20	1
4730-00-335-4728	13	29			
5306-00-335-4768	17A	23	5306-00-335-4768	17	25
4820-00-350-6749	16	5		17	7
2530-00-359-1162	17	4		17	21
5306-00-383-4957	17	19	2530-00-614-4454	17	5
5940-00-399-6676	4	7		17A	1
	5	7	5310-00-627-6128	3	2
	6	7		9	57
5310-00-407-9566	1	7		17A	19
	11	13	4710-00-630-9923	12	8
	14	10	2530-00-630-9924	12	6
2530-00-408-9177	8	8	4710-00-630-9925	12	13
4730-00-419-9425	11	3	4710-00-630-9926	12	5
	12	18	5310-00-637-9541	2	7
5310-00-427-0043	22	9		8	4
6220-00-433-5966	1	6		13	22
5330-00-462-0907	3	8		14	12
4730-00-463-1588	12	7		16	4
6220-00-500-0437	2	6			
4710-00-511-1692	10	1	5305-00-638-8920	8	2
2530-00-522-1157	9	47	5325-00-641-3859	5	13
2530-00-522-4183	9	12		6	13
	9	37		12	3
5360-00-535-1924	4	12	5310-00-641-9939	9	50
5310-00-550-3503	9	9		9	58
	9	35	3120-00-661-3885	22	15
4710-00-566-7133	11	8		22	16
4710-00-566-7134	11	6	6220-00-669-5623	2	1
5935-00-572-9180	5	4	5330-00-678-9047	1	4
	6	4	4720-00-679-0923	13	17
2530-00-574-8356	13	27	4710-00-679-3167	13	26
4730-00-580-8457	15	3	4710-00-679-3168	13	20
5310-00-582-5965	4	15	4710-00-679-3169	13	7
	5	9	4710-00-679-3170	13	12
	6	9	5310-00-679-3606	15	6
	9	49	1440-00-689-6160	10	4
	12	2	2530-00-693-1007	9	10
	17A	5		9	33
	22	3		9	36
	23	3	2530-00-693-1029	17	4
5310-00-582-6714	13	13	2530-00-696-0351	KIT	1
5330-00-584-0265	14	7	5360-00-699-9018	9	45
5310-00-584-7888	22	8	5360-00-700-4429	14	8
4730-00-595-0083	13	18	5360-00-706-9054	15	5
2590-00-611-7883	5	12	9905-00-712-8378	24	5

CROSS-REFERENCE INDEXES

NATIONAL STOCK NUMBER INDEX

STOCK NUMBER	FIG.	ITEM	STOCK NUMBER	FIG.	ITEM
5305-00-724-7225	19	3	2530-00-774-9403	9	33
4730-00-729-6437	11	5	6220-00-775-2384	1	3
	12	19	2530-00-777-3069	8	10
2530-00-730-7620	9	1	5315-00-778-4001	20	8
2530-00-730-7621	9	1	2530-00-791-0110	9	15
5310-00-732-0558	14	13	2530-00-791-3259	9	15
5310-00-732-0559	8	11		9	20
	13	23	4710-00-791-8077	11	1
	17A	18	4710-00-791-8078	11	1
5306-00-733-9239	17	19	2530-00-794-9763	9	47
1095-01-172-9560	17A	11	2530-00-797-9295	15	1
2530-00-737-3260	11	10	2530-00-798-4812	9	28
5365-00-737-3354	9	55	2530-00-798-4824	9	24
2530-00-737-7783	14	4	5340-00-809-1500	4	13
2530-00-738-9061	17	3	4720-00-809-2750	10	3
5310-00-741-1028	19	4	5340-00-809-5127	5	14
2530-00-741-1078	13	5		6	14
2940-00-741-1081	15	7			
5310-00-741-1378	17A	8	5315-00-815-8840	8	6
5310-00-741-1379	17A	7			
2530-00-741-1425	17A	13	5935-00-833-8561	4	5
5330-00-741-1429	17A	12		5	5
5365-00-741-1433	17A	20		6	5
5306-00-741-1760	9	32	5970-00-833-8562	4	6
2530-00-741-2050	9	14		5	6
2530-00-741-2065	11	9		6	6
2530-00-741-2068	9	53	5310-00-833-8567	5	3
5310-00-741-2088	11	2		6	3
	12	9	5310-00-835-2037	12	16
5365-00-741-2103	9	51	5315-00-842-3044	8	13
2530-00-741-2104	9	18			
5315-00-741-2106	9	52	6220-00-846-9745	1	1
5310-00-741-2120	9	19	4820-00-849-1220	13	24
2530-00-741-3231	17A	16	5315-00-849-9854	19	3
2530-00-741-5748	15	8			
9905-00-752-4649	4	9	5310-00-853-9335	9	16
6220-00-752-6020	2	2	4730-00-854-6931	12	12
5310-00-761-6882	4	16	2590-00-860-0538	4	3
	5	8	2590-00-866-5845	5	1
	6	8	5180-00-876-9336	KIT	2
	23	2	5310-00-880-2004	17	1
15305-00-764-0070	1	2	5310-00-880-2005	17	1
2530-00-770-9149	9	25	5310-00-880-7746	14	1
	9	30	5310-00-880-8189	21	10
2530-00-770-9150	9	29	5306-00-893-0549	21	2
2530-00-770-9151	9	26			
4730-00-773-2163	10	7			
4720-00-774-4040	12	20	5365-00-899-6723	8	3
2530-00-774-9401	9	2	5310-00-903-3993	9	8
2530-00-774-9402	9	2		9	34
	17	20	3040-00-735-5316	17	13
2530-00-741-3231	17	18	5310-00-741-1378	17	10
5330-00-741-1429	17	14	5310-00-741-1379	17	9
5365-00-741-1433	17	22	2530-00-741-1425	17	15

CROSS-REFERENCE INDEXES

NATIONAL STOCK NUMBER INDEX

STOCK NUMBER	FIG.	ITEM	STOCK NUMBER	FIG.	ITEM
4730-00-908-3195	10	2			
5340-00-921-5217	21	15			
5360-00-921-5219	21	14			
5306-00-921-5220	21	12			
5360-00-921-5221	21	8			
5315-00-921-5222	19	5			
5315-00-921-5223	21	3			
3040-00-921-5224	21	13			
5310-00-924-4218	9	48			
5310-00-934-9757	4	10			
5310-00-934-9758	24	2			
5305-00-939-0608	16	2			
5310-00-942-5183	22	13			
5310-00-950-0039	13	21			
	16	3			
5305-00-952-0760	21	17			
2530-00-973-2355	9	41			
2530-00-973-2356	9	41			
5340-00-977-0815	13	4			
5310-00-982-4908	12	17			
5305-00-984-6193	4	2			
5305-00-984-6210	24	4			
5340-00-985-0823	8	12			
2530-00-987-2565	11	11			
4730-00-987-9073	13	19			
5305-00-988-1723	17A	6			
5305-00-988-1723	17	6			
5305-00-988-1725	4	14			
	5	11			
	6	11			
	12	15			
	22	6			
	23	4			
2530-00-991-4342	11	11			
1440-00-994-8975	9	21			
4030-00-999-4048	20	3			
2540-00-999-5584	19	6			
9905-00-999-7369	24	7			
9905-00-999-7370	24	6			
5320-01-014-8964	21	16			
2590-01-034-0797	20	2			
5340-01-041-5052	4	4			
2510-01-048-3785	22	10			
2510-01-067-4717	3	4			
2530-01-083-5641	9	20			
6220-01-093-4439	3	3			
5330-01-094-5104	10	6			
5340-01-141-4814	14	3			
1095-01-162-0352	14	5			
2590-01-167-1827	6	1			
5340-01-189-6405	13	9			

CROSS-REFERENCE INDEXES

PART NUMBER INDEX

FSCM	PART NUMBER	STOCK NUMBER	FIG.	ITEM
16662	AC2569	4730-00-069-1186	13	15
78500	A1-3236M1261	2530-00-791-3259	9	15
			9	20
23075	A298320	2530-00-293-5139	14	1
23705	A298322	4710-00-511-1692	10	1
23705	A298408	4720-00-679-0923	13	17
23705	A298748	2530-00-741-1078	13	5
23705	A298749	2530-00-797-9295	15	1
78500	A3236M1261	2530-00-730-7620	9	1
78500	A3236N1262	2530-00-730-7621	9	1
18990	BG26332		18	3
63477	FC13927E		11	7
63477	FC14257	2530-00-741-2104	9	18
63477	FC22219	2530-00-770-9149	9	25
			9	30
63477	FC22220	2530-00-770-9150	9	29
63477	FC22221	2530-00-770-9151	9	26
63477	FD13346	4710-00-791-8078	11	1
63477	FD13347	4710-00-791-8077	11	1
63477	FD17762	2530-00-074-2357	9	7
63477	FE14240	2530-00-204-4800	10	5
			10	8
63477	FE17748	2530-00-774-9403	9	33
63477	FE17759	2530-00-774-9401	9	2
63477	FE17760	2530-00-774-9402	9	2
63477	FE19580	2530-00-791-0110	9	15
81348	FFB571TYPEA		21	6
81348	FFN836GPCTYPE1ST			
	LE31-4-20NUTPLAI		22	2
63477	F12088	5315-00-741-2106	9	52
74405	F1567-3-1	4710-00-630-9926	12	5
74405	F1567-3-2	4710-00-630-9925	12	13
74405	F1567-3-3	2530-00-630-9924	12	6
74405	F1567-3-4	4710-00-630-9923	12	8
63477	F17751	2530-00-973-2356	9	41
63477	F17758	5315-00-322-7261	9	3
			9	40
63477	F17764	2530-00-798-4824	9	24
63477	F19223	2530-00-693-1007	9	10
			9	33
			9	36
63477	F19581	2530-00-522-1157	9	47
63477	F19582	2530-00-794-9763	9	47
63477	F19635	2530-00-991-4342	11	11
63477	F19636	2530-00-987-2565	11	11
63477	F6222	4720-00-774-4040	12	20
63477	F6783	5310-00-641-9939	9	50
			9	58
63477	F9556	2530-00-741-2050	9	14
96906	MS15003-1	4730-00-050-4208	22	11
02686	129376		17	1
7J015	1050110		17	2
96906	MS51946-2		17	17

CROSS-REFERENCE INDEXES

PART NUMBER INDEX

FSCM	PART NUMBER	STOCK NUMBER	FIG.	ITEM
96906	MS15570-1251	6240-00-019-0877	1	5
			2	4
			3	7
96906	MS15570-623	6240-00-019-3093	3	5
96906	MS16536-175	5320-00-011-9951	9	11
			9	38
96906	MS18153-61	5305-00-939-0608	16	2
96906	MS18154-58	5305-00-115-9526	2	8
96906	MS19081-112	3110-00-100-5951	17A	9
96906	MS19081-112	3110-00-100-5951	17	11
96906	MS20913-1S	4730-00-221-2136	15	2
96906	MS21044N5	5310-00-088-0553	13	28
96906	MS21044N6	5310-00-950-0039	13	21
			16	3
96906	MS21045-6	5310-00-982-4908	12	17
96906	MS21083N14	5310-00-942-5183	22	13
96906	MS21333-107	5340-00-809-1500	4	13
96906	MS21333-34	5340-00-282-7519	12	14
96906	MS21333-36	5340-00-286-2494	13	1
96906	MS21333-37	5340-00-282-7515	22	4
96906	MS21333-38	5340-00-809-5127	5	14
			6	14
96906	MS24665-283	5315-00-842-3044	8	13
96906	MS24665-285	5315-00-005-0442	21	5
			21	9
96906	MS24665-498	5315-00-849-9854	19	3
96906	MS25036-54		4	8
96906	MS27148-2	5999-00-057-2929	5	2
			6	2
96906	MS27183-14	5310-00-080-6004	17A	15
96906	MS27183-14	5310-00-080-6004	17	17
96906	MS28775-012	5330-00-584-0265	14	7
96906	MS35206-245	5305-00-984-6193	4	2
96906	MS35206-263	5305-00-984-6210	24	4
96906	MS35206-279	5305-00-988-1723	17A	4
96906	MS35206-279	5305-00-988-1723	17	6
96906	MS35206-281	5305-00-988-1725	4	14
			5	11
			6	11
			12	15
			22	6
			23	4
96906	MS35207-277	5305-00-952-0760	21	17
96906	MS35333-41	5310-00-167-0721	9	17
96906	MS35333-49	5310-00-582-6714	13	13
96906	MS35335-35	5310-00-627-6128	3	2
			9	57
			17A	19
			17	21
96906	MS35335-36	5310-00-550-3503	9	9
			9	35

CROSS-REFERENCE INDEXES

PART NUMBER INDEX

FSCM	PART NUMBER	STOCK NUMBER	FIG.	ITEM
96906	MS35338-42	5310-00-045-3299	4	11
96906	MS35338-44	5310-00-582-5965	4	15
			5	9
			6	9
			9	49
			12	2
			17A	5
			17	7
			22	3
			23	3
96906	MS35338-45	5310-00-407-9566	1	7
			11	13
			14	10
96906	MS35338-46	5310-00-637-9541	8	4
			13	22
			14	12
			16	4
96906	MS35338-51	5310-00-584-7888	22	8
96906	MS35387-1	9905-00-205-2795	23	1
96906	MS35387-2	9905-00-202-3639	23	1
96906	MS35478-1683	6240-00-044-6914	2	5
			3	6
96906	MS35649-202	5310-00-934-9758	24	2
96906	MS35649-282	5310-00-934-9757	4	10
96906	MS35691-13	5310-00-853-9335	9	16
96906	MS35691-53	5310-00-835-2037	12	16
96906	MS35743-3	5320-01-014-8964	21	16
96906	MS35746-1	4730-00-595-0083	13	18
96906	MS35782-5	4820-00-849-1220	13	24
96906	MS35810-4	5315-00-815-8840	8	6
96906	MS35812-4	5340-00-985-0823	8	12
96906	MS35842-10	4730-00-908-3195	10	2
96906	MS39133-2-B	4730-00-987-9073	13	19
96906	MS39179-9	4730-00-142-3076	13	25
96906	MS39182-3	4730-00-069-1187	13	16
96906	MS39182-5	4730-00-289-0155	16	6
96906	MS39182-6	4730-00-289-0051	13	6
96906	MS45904-76	5310-00-061-1258	3	2
96906	MS51302-1	6220-00-846-9745	1	1
96906	MS51329-1	6220-00-669-5623	2	1
96906	MS51339-3	2540-00-999-5584	19	6
7J015	1050111		18A	2
96906	MS51375-1	2640-00-060-3550	18	5
96906	MS51845-4	4730-00-249-3885	13	11
96906	MS51877-4	4730-00-278-8886	12	4
96906	MS51922-17	5310-00-087-4652	8	5
96906	MS51922-33	5310-00-225-6993	20	6
96906	MS51922-49	5310-00-269-4040	19	2
			19	6

CROSS-REFERENCE INDEXES

PART NUMBER INDEX

FSCM	PART NUMBER	STOCK NUMBER	FIG.	ITEM
96906	MS51946-1	5306-00-733-9239	17	19
96906	MS51946-2	5306-00-383-4957	17	19
96906	MS51959-46	5305-00-764-0070	1	2
96906	MS51967-11	5310-00-880-8189	21	10
96906	MS51967-2	5310-00-761-6882	4	16
			5	8
			6	8
			23	2
96906	MS51967-8	5310-00-732-0558	14	13
96906	MS51968-5	5310-00-880-7746	14	11
96906	MS51968-8	5310-00-732-0559	8	11
			13	23
			17A	18
			17	20
96906	MS51970-1	5310-00-924-4218	9	48
96906	MS51970-4	5310-00-903-3993	9	8
			9	34
96906	MS51983-3	5310-00-880-2004	17	1
96906	MS51983-4	5310-00-880-2005	17	1
96906	MS52125-2	6220-01-093-4439	3	3
96906	MS521301A204120	4720-00-809-2750	10	3
96906	MS53004-2	2530-00-021-2366	16	1
96906	MS53007-1	9905-00-999-7370	24	6
96906	MS53007-2	9905-00-999-7369	24	7
96906	MS53044-5	2530-00-026-0265	17	2
96906	MS53045-3	2530-00-738-9061	17	3
96906	MS53047-1	6220-00-500-0437	2	6
96906	MS53068-1	2530-00-693-1029	17	4
96906	MS53068-2	2530-00-359-1162	17	4
96906	MS53060-3	2530-00-777-3069	8	10
96906	MS87006-41	4030-00-999-4048	20	3
96906	MS90725-31	5306-00-225-8496	11	12
96906	MS90725-57	5305-00-269-3208	3	1
96906	MS90726-29	5306-00-225-9084	1	8
96906	MS90726-33	5306-00-225-9088	14	2
96906	MS90726-34	5306-00-225-9089	13	8
96906	MS90726-60	5305-00-269-2803	9	46
			17A	21
			17	23
96906	MS90726-64	5305-00-269-2807	9	56
96906	MS90726-8	5305-00-267-8974	9	54
96906	MS90727-60	5305-00-269-3236	13	2
96906	MS90727-64	5305-00-269-3240	17A	22
96906	MS90727-64	5305-00-269-3240	17	24
96906	MS90727-74	5305-00-269-3250	13	3
96906	MS90728-114	5305-00-071-2070	20	7
96906	MS90728-167	5305-00-724-7225	19	3
96906	MS90728-36	5306-00-226-4829	8	7
96906	MS90728-67	5305-00-638-8920	8	2
91340	M4X509	5330-00-285-5123	15	4
81349	M43436/1-1	9905-00-752-4649	4	9
40342	N-12970-A	2530-00-741-5748	15	8
80205	NAS1611-123	5330-01-094-5104	10	6

CROSS-REFERENCE INDEXES

PART NUMBER INDEX

FSCM	PART NUMBER	STOCK NUMBER	FIG.	ITEM
40342	N12929	5360-00-535-1924	4	12
23705	N12971	2940-00-741-1081	15	7
40342	N12972	5310-00-679-3606	15	6
40342	N13008	5340-00-977-0815	13	4
40342	N3550	2530-00-574-8356	13	27
81348	G186.10R22.5		18A	1
81348	ZZ-T-381M/ GROUP 3/9.00-20/D/TBCC	2610-00-262-8677	18	1
17875	1DOAA	2640-00-050-1229	18	4
53335	10130	2530-00-696-0351	KIT	1
19207	10891263	2590-00-860-0538	4	3
19207	10910885	5330-00-246-8223	17A	6
19207	10910885	5330-00-246-8223	17	8
19207	10931736		13	10
19207	12461851-12		19	1
19207	11639519-2	5330-00-462-0907	3	8
19207	11639520	2510-01-067-4717	3	4
19207	11639535	6220-00-179-4324	3	9
19207	11652180	2590-01-167-1827	6	1
19207	117964	5325-00-641-3859	5	13
21450	120520		5	10
			6	10
02686	123917	2530-00-973-2355	9	41
73808	20R	2640-00-158-5617	18	2
23862	2275698	5365-00-741-1433	17A	20
23862	2275698	5365-00-741-1433	17	22
24617	2284031	2530-00-741-1425	17A	13
24617	2284031	2530-00-741-1425	17	15
12603	23E06	5310-00-637-9541	2	7
06853	235091	4730-00-580-8457	15	3
06853	235093	5360-00-706-9054	15	5
30612	24569D	5310-00-021-9760	13	14
92867	3100C21B180Y	3040-00-330-3262	8	1
10001	419908PC40		8	9
94135	43W6335-40	5310-00-274-8710	24	3
24617	446284	5310-00-044-6284	19	5
63477	5156653	4730-00-854-6931	12	12
79470	5167679	4730-00-463-1588	12	7
19207	5214539	5310-00-275-6635	11	4
			12	11
19207	5298653	5365-00-274-4544	12	10
19207	5303461	2530-00-408-9177	8	8
19207	542048	3120-00-661-3885	22	15
			22	16
19207	545033	5340-00-275-6042	4	1
73331	5942528	5330-00-678-9047	1	4
19204	6144454	2530-00-614-4454	17A	3
19204	6144454	2530-00-614-4454	17	5
19207	7064979		9	13
			9	39
19207	11682127-1	1095-01-172-9560	17A	11
19207	11682127-1	1095-01-172-9560	17	13
09386	67428E2	5310-00-655-9599	17A	14
09386	67428E2	5310-00-655-9599	17	16

CROSS-REFERENCE INDEXES

PART NUMBER INDEX

FSCM	PART NUMBER	STOCK NUMBER	FIG.	ITEM
19207	7263713	2530-00-200-1286	7	1
19207	7320658	5330-00-297-7106	2	3
19207	7373260	2530-00-737-3260	11	10
19207	7373354	5365-00-737-3354	9	55
19207	7377783	2530-00-737-7783	14	4
19207	7392808	5315-00-921-5223	21	3
19207	7392809	5360-00-921-5219	21	14
19207	7392811		22	7
19207	7392812-1	2510-01-048-3785	22	10
19207	7392813	5306-00-613-2011	22	1
19207	7392817	2510-00-613-2012	22	12
19207	7392819	2510-00-613-2013	22	14
19207	12476168		20	1
19207	MS87006-41	4030-00-999-4048	20	3
19207	7392849	5340-00-921-5217	21	15
19207	7392850	5360-00-921-5221	21	8
19207	7392851	5306-00-921-5220	21	12
19207	7392852	5306-00-893-0549	21	2
19207	12476152		20	9
19207	7411028	5310-00-741-1028	19	4
19207	7411041	5310-00-427-0043	22	9
19207	7411377	3110-00-143-7586	17A	10
19207	7411377	3110-00-143-7586	17	12
19207	7411378	5310-00-741-1378	17A	8
19207	7411378	5310-00-741-1378	17	10
19207	7411379	5310-00-741-1379	17A	7
19207	7411379	5310-00-741-1379	17	9
19207	7411429	5330-00-741-1429	17A	12
19207	7411429	5330-00-741-1429	17	14
19207	7411760	5306-00-741-1760	9	32
19207	7412068	2530-00-741-2068	9	53
63477	7412079	4730-00-729-6437	11	5
			12	19
19207	7412088	5310-00-741-2088	11	2
			12	9
19207	7412103	5365-00-741-2103	9	51
19207	7412120	5310-00-741-2120	9	19
19207	7413231	2530-00-741-3231	17A	16
19207	7413231	2530-00-741-3231	17	18
19207	7526020	6220-00-752-6020	2	2
19204	7550526	5180-00-876-9336	KIT	2
19207	7706441	5310-00-013-4551	12	1
19207	7745464	4730-00-419-9425	11	3
			12	18
19207	7979297	4820-00-350-6749	16	5

CROSS-REFERENCE INDEXES

PART NUMBER INDEX

FSCM	PART NUMBER	STOCK NUMBER	FIG.	ITEM
19207	7979373	9905-00-282-7489	24	1
19207	7979599	1095-01-162-0352	14	5
19207	7979602	5340-01-141-4814	14	3
97554	7979605	2530-00-192-8928	14	9
19207	7979608	5360-00-700-4429	14	8
19207	7979610	5340-00-178-1441	14	6
19207	7979690	4730-00-065-0718	10	9
63477	7979691	4730-00-773-2163	10	7
19207	7979699	1440-00-689-6160	10	4
19207	7979851	5340-01-189-6405	13	9
19207	820070	4010-00-228-9977	20	4
40342	8330281	4730-00-335-4728	13	29
19207	8338561	5935-00-833-8561	4	5
			5	5
			6	5
19207	8338562	5970-00-833-8562	4	6
			5	6
			6	6
19207	8338564	5940-00-399-6676	4	7
			5	7
			6	7
19207	8338566	5935-00-572-9180	5	4
			6	4
19207	8338567	5310-00-833-8567	5	3
			6	3
19207	8343436	5315-00-778-4001	20	8
19207	8347216	5340-01-041-5052	4	4
19207	8699500	5365-00-899-6723	8	3
19207	8699504		22	5
19207	8699510	4710-00-679-3168	13	20
19207	8699511	4710-00-679-3169	13	7
19207	8699512	4710-00-679-3170	13	12
19207	8699513	4710-00-679-3167	13	26
19207	8699517	5315-00-921-5222	19	5
19207	8699518	2540-00-177-8119	19	4
19207	8699535		21	7
19207	8699536		21	11
19207	8699545	2590-00-317-3137	21	1
19207	8699546		21	4
19207	8699580	3040-00-921-5224	21	13
19207	8712118		9	23
19207	8712119		9	22
19207	7392875	5340-01-034-0797	20	2
18876	8720025	5306-00-335-4768	17A	23
18876	8720025	5306-00-335-4768	17	25
19207	8720331	1440-00-994-8975	9	21
19207	8720515	5360-00-699-9018	9	45
19207	8720517	2530-00-522-4183	9	12
			9	37
18876	8733897	2530-00-798-4812	9	28
19207	8733908	2530-00-159-8755	9	27
19207	12476134		20	5

PART NUMBER INDEX

FSCM	PART NUMBER	STOCK NUMBER	FIG.	ITEM
19207	8733909	2530-00-159-8756	9	31
19207	8733920	4710-00-566-7133	11	8
19207	8733922	4710-00-566-7134	11	6
19207	8733926	3040-00-150-7127	9	7
19207	8733928	2530-00-741-2065	11	9
19207	8733933	2530-01-083-5641	9	20
19207	8733935	5310-00-314-0764	9	6
			9	42
19207	8733936	5310-00-314-0765	9	5
			9	43
19207	8733937	5310-00-322-7260	9	4
			9	44
19207	8741646	6220-00-775-2384	1	3
19207	8741650	6220-00-4339-5966	1	6
19207	8742385	2510-00-177-7806	19	4
19207	8742396-1		24	5
19207	12331775		24	5
19207	8742401	2590-00-866-5845	5	1
19207	8747908	2590-00-611-7883	5	12
			6	12

CROSS-REFERENCE INDEXES

FIGURE AND ITEM NUMBER INDEX

FIG.	ITEM	STOCK NUMBER	FSCM	PART NUMBER
KIT	1	2530-00-696-0351	53335	10130
KIT	2	5180-00-876-9336	19204	7550526
1	1	6220-00-846-9745	96906	MS51302-1
1	2	5305-00-764-0070	96906	MS51959-46
1	3	6220-00-775-2384	19207	8741646
1	4	5330-00-678-9047	73331	5942528
1	5	6240-00-019-0877	96906	MS15570-1251
1	6	6220-00-433-5966	19207	8741650
1	7	5310-00-407-9566	96906	MS35338-45
1	8	5306-00-225-9084	96906	MS90726-29
2	1	6220-00-669-5623	96906	MS51329-1
2	2	6220-00-752-6020	19207	7526020
2	3	5330-00-297-7106	19207	7320658
2	4	6240-00-019-0877	96906	MS15570-1251
2	5	6240-00-044-6914	96906	MS35478-1683
2	6	6220-00-500-0437	96906	MS53047-1
2	7	5310-00-637-9541	12603	23E06
2	8	5305-00-115-9526	96906	MS18154-58
3	1	5305-00-269-3208	96906	MS90725-57
3	2	5310-00-061-1258	96906	MS45904-76
3	2	5310-00-627-6128	96906	MS35335-35
3	3	6220-01-093-4439	96906	MS52125-2
3	4	2510-01-067-4717	19207	11639520
3	5	6240-00-019-3093	96906	MS15570-623
3	6	6240-00-044-6914	96906	MS35478-1683
3	7	6240-00-019-0877	96906	MS15570-1251
3	8	5330-00-462-0907	19207	11639519-2
3	9	6220-00-179-4324	19207	11639535
4	1	5340-00-275-6042	19207	545033
4	2	5305-00-984-6193	96906	MS35206-245
4	3	2590-00-860-0538	19207	10891263
4	4	5340-01-041-5052	19207	8347216
4	5	5935-00-833-8561	19207	8338561
4	6	5970-00-833-8562	19207	8338562
4	7	5940-00-399-6676	19207	8338564
4	8		96906	MS25036-54
4	9	9905-00-752-4649	81349	M43436/1-1
4	10	5310-00-934-9757	96906	MS35649-282
4	11	5310-00-045-3299	96906	MS35338-42
4	12	5360-00-535-1924	40342	N12929
4	13	5340-00-809-1500	96906	MS21333-107
4	14	5305-00-988-1725	96906	MS35206-281
4	15	5310-00-582-5965	96906	MS35338-44
4	16	5310-00-761-6882	96906	MS51967-2
5	1	2590-00-866-5845	19207	8742401
5	2	5999-00-057-2929	96906	MS27148-2
5	3	5310-00-833-8567	19207	8338567
5	4	5935-00-572-9180	19207	8338566
5	5	5935-00-833-8561	19207	8338561
5	6	5970-00-833-8562	19207	8338562
5	7	5940-00-399-6676	19207	8338564

CROSS-REFERENCE INDEXES

FIGURE AND ITEM NUMBER INDEX

FIG.	ITEM	STOCK NUMBER	FSCM	PART NUMBER
	8	5310-00-761-6882	96906	MS51967-2
	9	5310-00-582-5965	96906	MS35338-44
	10		21450	120520
	11	5305-00-988-1725	96906	MS35206-281
	12	2590-00-611-7883	19207	8747908
	13	5325-00-641-3859	19207	117964
	14	5340-00-809-5127	96906	MS21333-38
	1	2590-01-167-1827	19207	11652180
	2	5999-00-057-2929	96906	MS27148-2
	3	5310-00-833-8567	19207	8338567
	4	5935-00-572-9180	19207	8338566
	5	5935-00-833-8561	19207	8338561
	6	5970-00-833-8562	19207	8338562
	7	5940-00-399-6676	19207	8338564
	8	5310-00-761-6882	96906	MS51967-2
	9	5310-00-582-5965	96906	MS35338-44
	10		21450	120520
	11	5305-00-988-1725	96906	MS35206-281
	12	2590-00-611-7883	19207	8747908
	13	5325-00-641-3859	19207	117964
	14	5340-00-809-5127	96906	MS21333-38
	1	2530-00-200-1286	19207	7263713
	1	3040-00-330-3262	92867	3100C21B180Y
	2	5305-00-638-8920	96906	MS90728-67
	3	5365-00-899-6723	19207	8699500
	4	5310-00-637-9541	96906	MS35338-46
	5	5310-00-087-4652	96906	MS51922-17
	6	5315-00-815-8840	96906	MS35810-4
	7	5306-00-226-4829	96906	MS90728-36
	8	2530-00-408-9177	19207	5303461
	9		10001	419908PC40
	10	2530-00-777-3069	96906	MS53060-3
	11	5310-00-732-0559	96906	MS51968-8
	12	5340-00-985-0823	96906	MS35812-4
	13	5315-00-842-3044	96906	MS24665-283
	1	2530-00-730-7620	78500	A3236M1261
	1	2530-00-730-7621	78500	A3236N1262
	2	2530-00-774-9401	63477	FE17759
	2	2530-00-774-9402	63477	FE17760
	3	5315-00-322-7261	63477	F17758
	4	5310-00-322-7260	19207	8733937
	5	5310-00-314-0765	19207	8733936
	6	5310-00-314-0764	19207	8733935
	7	2530-00-074-2357	63477	FD17762
	7	3040-00-150-7127	19207	8733926
	8	5310-00-903-3993	96906	MS51970-4
	9	5310-00-550-3503	96906	MS35335-36
	10	2530-00-693-1007	63477	F19223
	11	5320-00-011-9951	96906	MS16536-175
	12	2530-00-522-4183	19207	8720517
	13		19207	7064979

CROSS-REFERENCE INDEXES

FIGURE AND ITEM NUMBER INDEX

FIG.	ITEM	STOCK NUMBER	FSCM	PART NUMBER
9	14	2530-00-741-2050	63477	F9556
9	15	2530-00-791-0110	63477	FE19580
9	15	2530-00-791-3259	78500	A1-3236M1261
9	16	5310-00-853-9335	96906	MS35691-13
9	17	5310-00-167-0721	96906	MS35333-41
9	18	2530-00-741-2104	63477	FC14257
9	19	5310-00-741-2120	19207	7412120
9	20	2530-00-791-3259	78500	A1-3236M1261
9	20	2530-01-083-5641	19207	8733933
9	21	1440-00-994-8975	19207	8720331
9	22		19207	8712119
9	23		19207	8712118
9	24	2530-00-798-4824	63477	F17764
9	25	2530-00-770-9149	63477	FC22219
9	26	2530-00-770-9151	63477	FC22221
9	27	2530-00-159-8755	19207	8733908
9	28	2530-00-798-4812	18876	8733897
9	29	2530-00-770-9150	63477	FC22220
9	30	2530-00-770-9149	63477	FC22219
9	31	2530-00-159-8756	19207	8733909
9	32	5306-00-741-1760	19207	7411760
9	33	2530-00-693-1007	63477	F19223
9	33	2530-00-774-9403	63477	FE17748
9	34	5310-00-903-3993	96906	MS51970-4
9	35	5310-00-550-3503	96906	MS35335-36
9	36	2530-00-693-1007	63477	F19223
9	37	2530-00-522-4183	19207	8720517
9	38	5320-00-011-9951	96906	MS16536-175
9	39		19207	7064979
9	40	5315-00-322-7261	63477	F17758
9	41	2530-00-973-2355	02686	123917
9	41	2530-00-973-2356	63477	F17751
9	42	5310-00-314-0764	19207	8733935
9	43	5310-00-314-0765	19207	8733936
9	44	5310-00-322-7260	19207	8733937
9	45	5360-00-699-9018	19207	8720515
9	46	5305-00-269-2803	96906	MS90726-60
9	47	2530-00-522-1157	63477	F19581
9	47	2530-00-794-9763	63477	F19582
9	48	5310-00-924-4218	96906	MS51970-1
9	49	5310-00-582-5965	96906	MS35338-44
9	50	5310-00-641-9939	63477	F6783
9	51	5365-00-741-2103	19207	7412103
9	52	5315-00-741-2106	63477	F12088
9	53	2530-00-741-2068	19207	7412068
9	54	5305-00-267-8974	96906	MS90726-8
9	55	5365-00-737-3354	19207	7373354
9	56	5305-00-269-2807	96906	MS90726-64
9	57	5310-00-627-6128	96906	MS35335-35
9	58	5310-00-641-9939	63477	F6783
10	1	4710-00-511-1692	23705	A298322

CROSS-REFERENCE INDEXES

FIGURE AND ITEM NUMBER INDEX

FIG.	ITEM	STOCK NUMBER	FSCM	PART NUMBER
10	2	4730-00-908-3195	96906	MS35842-10
10	3	4720-00-809-2750	96906	MS521301A204120
10	4	1440-00-689-6160	19207	7979699
10	5	2530-00-204-4800	63477	FE14240
10	6	5330-01-094-5104	80205	NAS1611-123
10	7	4730-00-773-2163	63477	7979691
10	8	2530-00-204-4800	63477	FE14240
10	9	4730-00-065-0718	19207	7979690
11	1	4710-00-791-8077	63477	FD13347
11	1	4710-00-791-8078	63477	FD13346
11	2	5310-00-741-2088	19207	7412088
11	3	4730-00-419-9425	19207	7745464
11	4	5310-00-275-6635	19207	5214539
11	5	4730-00-729-6437	63477	7412079
11	6	4710-00-566-7134	19207	8733922
11	7		63477	FC13927E
11	8	4710-00-566-7133	19207	8733920
11	9	2530-00-741-2065	19207	8733928
11	10	2530-00-737-3260	19207	7373260
11	11	2530-00-987-2565	63477	F19636
11	11	2530-00-991-4342	63477	F19635
11	12	5306-00-225-8496	96906	MS90725-31
11	13	5310-00-407-9566	96906	MS35338-45
12	1	5310-00-013-4551	19207	7706441
12	2	5310-00-582-5965	96906	MS35338-44
12	3	5325-00-641-3859	19207	117964
12	4	4730-00-278-8886	96906	MS51877-4
12	5	4710-00-630-9926	74405	F1567-3-1
12	6	2530-00-630-9924	74405	F1567-3-3
12	7	4730-00-463-1588	79470	5167679
12	8	4710-00-630-9923	74405	F1567-3-4
12	9	5310-00-741-2088	19207	7412088
12	10	5365-00-274-4544	19207	5298653
12	11	5310-00-275-6635	19207	5214539
12	12	4730-00-854-6931	63477	5156653
12	13	4710-00-630-9925	74405	F1567-3-2
12	14	5340-00-282-7519	96906	MS21333-34
12	15	5305-00-988-1725	96906	MS35206-281
12	16	5310-00-835-2037	96906	MS35691-53
12	17	5310-00-982-4908	96906	MS21045-6
12	18	4730-00-419-9425	19207	7745464
12	19	4730-00-729-6437	63477	7412079
12	20	4720-00-774-4040	63477	F6222
13	1	5340-00-286-2494	96906	MS21333-36
13	2	5305-00-269-3236	96906	MS90727-60
13	3	5305-00-269-3250	96906	MS90727-74
13	4	5340-00-977-0815	40342	N13008
13	5	2530-00-741-1078	23705	A298748
13	6	4730-00-289-0051	96906	MS39182-6
13	7	4710-00-679-3169	19207	8699511
13	8	5306-00-225-9089	96906	MS90726-34

CROSS-REFERENCE INDEXES

FIGURE AND ITEM NUMBER INDEX

FIG.	ITEM	STOCK NUMBER	FSCM	PART NUMBER
13	9	5340-01-189-6405	19207	7979851
13	10		19207	10931736
13	11	4730-00-249-3885	96906	MS51845-4
13	12	4710-00-679-3170	19207	8699512
13	13	5310-00-582-6714	96906	MS35333-49
13	14	5310-00-021-9760	30612	24569D
13	15	4730-00-069-1186	16662	AC2569
13	16	4730-00-069-1187	96906	MS39182-3
13	17	4720-00-679-0923	23705	A298408
13	18	4730-00-595-0083	96906	MS35746-1
13	19	4730-00-987-9073	96906	MS39133-2-B
13	20	4710-00-679-3168	19207	8699510
13	21	5310-00-950-0039	96906	MS21044N6
13	22	5310-00-637-9541	96906	MS35338-46
13	23	5310-00-732-0559	96906	MS51968-8
13	24	4820-00-849-1220	96906	MS35782-5
13	25	4730-00-142-3076	96906	MS39179-9
13	26	4710-00-679-3167	19207	8699513
13	27	2530-00-574-8356	40342	N3550
13	28	5310-00-088-0553	96906	MS21044N5
13	29	4730-00-335-4728	40342	8330281
14	1	2530-00-293-5139	23075	A298320
14	2	5306-00-225-9088	96906	MS90726-33
14	3	5340-01-141-4814	19207	7979602
14	4	2530-00-737-7783	19207	7377783
14	5	1095-01-162-0352	19207	7979599
14	6	5340-00-178-1441	19207	7979610
14	7	5330-00-584-0265	96906	MS28775-012
14	8	5360-00-700-4429	19207	7979608
14	9	2530-00-192-8928	97554	7979605
14	10	5310-00-407-9566	96906	MS35338-45
14	11	5310-00-880-7746	96906	MS51968-5
14	12	5310-00-637-9541	96906	MS35338-46
14	13	5310-00-732-0558	96906	MS51967-8
15	1	2530-00-797-9295	23705	A298749
15	2	4730-00-221-2136	96906	MS20913-1S
15	3	4730-00-580-8457	06853	235091
15	4	5330-00-285-5123	91340	M4X509
15	5	5360-00-706-9054	06853	235093
15	6	5310-00-679-3606	40342	N12972
15	7	2940-00-741-1081	23705	N12971
15	8	2530-00-741-5748	40342	N-12970-A
16	1	2530-00-021-2366	96906	MS53004-2
16	2	5305-00-939-0608	96906	MS18153-61
16	3	5310-00-950-0039	96906	MS21044N6
16	4	5310-00-637-9541	96906	MS35338-46
16	5	4820-00-350-6749	19207	7979297
16	6	4730-00-289-0155	96906	MS39182-5
17	1	5310-00-880-2004	96906	MS51983-3
17	1	5310-00-880-2005	96906	MS51983-4
17	2	2530-00-026-0265	96906	MS53044-5
17	3	2530-00-738-9061	96906	MS53045-3

CROSS-REFERENCE INDEXES

FIGURE AND ITEM NUMBER INDEX

FIG.	ITEM	STOCK NUMBER	FSCM	PART NUMBER
17	4	2530-00-359-1162	96906	MS53068-2
17	4	2530-00-693-1029	96906	MS53068-1
17	5	2530-00-614-4454	19204	6144454
17	6	5305-00-988-1723	96906	MS35206-279
17	7	5310-00-582-5965	96906	MS35338-44
17	8	5330-00-246-8223	19207	10910885
17	9	5310-00-741-1379	19207	7411379
17	10	5310-00-741-1378	19207	7411378
17	11	3110-00-100-5951	96906	MS19081-112
17	12	3110-00-143-7586	19207	7411377
17	13	3040-00-735-5316	19207	7263712
17	14	5330-00-741-1429	19207	7411429
17	15	2530-00-741-1425	24617	2284031
17	16			
17	17	5310-00-080-6004	96906	MS27183-14
17	18	2530-00-741-3231	19207	7413231
17	19	5306-00-383-4957	96906	MS51946-2
17	19	5306-00-733-9239	96906	MS51946-1
17	20	5310-00-732-0559	96906	MS51968-8
17	21	5310-00-627-6128	96906	MS35335-35
17	22	5365-00-741-1433	23862	2275698
17	23	5305-00-269-2803	96906	MS90726-60
17	24	5305-00-269-3240	96906	MS90727-64
17	25	5306-00-335-4768	18876	8720025
17A	1		02686	129378
17A	2		7J015	1050110
17A	3	2530-00-614-4454	19204	6144454
17A	4	5305-00-988-1723	96906	MS35206-279
17A	5	5310-00-582-5965	96906	MS35338-44
17A	6	5330-00-246-8223	19207	10910885
17A	7	5310-00-741-1379	19207	7411379
17A	8	5310-00-741-1378	19207	7411378
17A	9	3110-00-100-5951	96906	MS19081-112
17A	10	3110-00-143-7586	19207	7411377
17A	11		19207	1682127-1
17A	12	5330-00-741-1429	19207	7411429
17A	13	2530-00-741-1425	24617	2284031
17A	14	5310-00-655-9599	09386	67428E2
17A	15	5310-00-080-6004	96906	MS27183-14
17A	16	2530-00-741-3231	19207	7413231
17A	17	5306-00-383-4957	96906	MS51946-2
17A	18	5310-00-732-0559	96906	MS51968-8
17A	19	5310-00-627-6128	96906	MS35335-35
17A	20	5365-00-741-1433	23862	2275698
17A	21	5305-00-269-2803	96906	MS90726-60
17A	22	5305-00-269-3240	96906	MS90727-64
17A	23	5306-00-335-4768	18876	8720025
18	1	2610-00-262-8677	81348	ZZ-T-381M/GROUP 3/9.00-20/O/TBCC
18	2	2640-00-158-5617	73808	20R
18	3		18990	BG26332
18	4	2640-00-050-1229	17875	100AA
18	5	2640-00-060-3550	96906	MS51375-1
18A	1		81348	G186.10R22.5
18A	2		7J015	1050111

CROSS-REFERENCE INDEXES

FIGURE AND ITEM NUMBER INDEX

FIG.	ITEM	STOCK NUMBER	FSCM	PART NUMBER
19	1		19207	12461851-12
19	2	5310-00-269-4040	96906	MS51922-49
19	3	5305-00-724-7225	96906	MS90728-167
19	3	5315-00-849-9854	96906	MS24665-498
19	4	2510-00-177-7806	19207	8742385
19	4	2540-00-177-8119	19207	8699518
19	4	5310-00-741-1028	19207	7411028
19	5	5310-00-044-6284	24617	446284
19	5	5315-00-921-5222	19207	8699517
19	6	2540-00-999-5584	96906	MS51339-3
19	6	5310-00-269-4040	96906	MS51922-49
20	1		19207	12476168
20	2	2590-01-034-0797	19207	7392875
20	3	4030-00-999-4048	96906	MS87006-41
20	4	4010-00-228-9977	19207	820070
20	5		19207	12476134
20	6	5310-00-225-6993	96906	MS51922-33
20	7	5305-00-071-2070	96906	MS90728-114
20	8	5315-00-778-4001	19207	8343436
20	9		19207	12476152
21	1	2590-00-317-3137	19207	8699545
21	2	5306-00-893-0549	19207	7392852
21	3	5315-00-921-5223	19207	7392808
21	4		19207	8699546
21	5	5315-00-005-0442	96906	MS24665-285
21	6		81348	FFB571TYPEA
21	7		19207	8699535
21	8	5360-00-921-5221	19207	7392850
21	9	5315-00-005-0442	96906	MS24665-285
21	10	5310-00-880-8189	96906	MS51967-11
21	11		19207	8699536
21	12	5306-00-921-5220	19207	7392851
21	13	3040-00-921-5224	19207	8699580
21	14	5360-00-921-5219	19207	7392809
21	15	5340-00-921-5217	19207	7392849
21	16	5320-01-014-8964	96906	MS35743-3
21	17	5305-00-952-0760	96906	MS35207-277
22	1	5306-00-613-2011	19207	7392813
22	2		81348	FFN836GPCTYPE1ST LE31-4-20NUTPLAI
22	3	5310-00-582-5965	96906	MS35338-44
22	4	5340-00-282-7515	96906	MS21333-37
22	5		19207	8699504
22	6	5305-00-988-1725	96906	MS35206-281
22	7		19207	7392811
22	8	5310-00-584-7888	96906	MS35338-51
22	9	5310-00-427-0043	19207	7411041

CROSS-REFERENCE INDEXES

FIGURE AND ITEM NUMBER INDEX

FIG.	ITEM	STOCK NUMBER	FSCM	PART NUMBER
22	10	2510-01-048-3785	19207	7392812-1
22	11	4730-00-050-4208	96906	MS15003-1
22	12	2510-00-613-2012	19207	7392817
22	13	5310-00-942-5183	96906	MS21083N14
22	14	2510-00-613-2013	19207	7392819
22	15	3120-00-661-3885	19207	542048
22	16	3120-00-661-3885	19207	542048
23	1	9905-00-202-3639	96906	MS35387-2
23	1	9905-00-205-2795	96906	MS35387-1
23	2	5310-00-761-6882	96906	MS51967-2
23	3	5310-00-582-5965	96906	MS35338-44
23	4	5305-00-988-1725	96906	MS35206-281
24	1	9905-00-282-7489	19207	7979373
24	2	5310-00-934-9758	96906	MS35649-202
24	3	5310-00-274-8710	94135	43W6335-40
24	4	5305-00-984-6210	96906	MS35206-263
24	5		19207	8742396-1
24	5		19207	12331775
24	6	9905-00-999-7370	96906	MS53007-1
24	7	9905-00-999-7369	96906	MS53007-2

APPENDIX G

TORQUE LIMITS

SAE Grade Number	1 or 2	5	6 or 7	8
Quality of Material	Indeterminate	Minimum Commercial	Medium Commercial	Best Commercial
Capscrew Head Markings	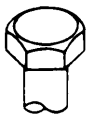	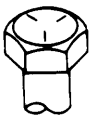		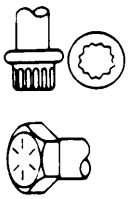

NOTE

Head marking may vary with different manufacturers.

Capscrew Body Size (Inches) - (Thread)		Torque Ft Lb (N.m)	Torque Ft Lb (N.m)	Torque Ft Lb (N.m)	Torque Ft Lb (N.m)
1/4	20	5 (7)	8 (11)	10 (14)	12 (16)
	28	6 (8)	10 (14)		14 (19)
5/16	18	11 (15)	17 (23)	19 (26)	24 (33)
	24	13 (18)	19 (26)		27 (37)
3/8	16	18 (24)	31 (42)	34 (46)	44 (60)
	24	20 (27)	35 (47)		49 (66)
7/16	14	28 (38)	49 (66)	55 (75)	70 (95)
	20	30 (41)	55 (75)		78 (106)
1/2	13	39 (53)	75 (102)	85 (115)	105 (142)
	20	41 (56)	85 (115)		120 (163)
9/16	12	51 (69)	110 (149)	120 (163)	155 (210)
	18	55 (75)	120 (163)		170 (231)
5/8	11	83 (113)	150 (203)	167 (226)	210 (285)
	18	95 (129)	170 (231)		240 (325)
3/4	10	105 (142)	270 (366)	280 (380)	375 (508)
	16	115 (156)	295 (400)		420 (569)
7/8	9	160 (217)	395 (536)	440 (597)	605 (820)
	14	175 (237)	435 (590)		675 (915)
1	8	235 (319)	590 (800)	660 (895)	910 (1234)
	14	250 (339)	660 (895)		990 (1342)

CAUTION

If replacement capscrews are of a higher grade than originally supplied, use torque specifications for that placement. This will prevent equipment damage due to over torquing.

NOTE

Always use the torque values listed above when specific torque values are not available.

TA223374

INDEX

Subject	Page
A	
Additional authorization list	D-1
After use	2-14
Airbrake line replacement	4-68
Airbrake system	4-75
Air chamber	4-64
Air coupling quick disconnects (gladhands)	4-73
Air filter assembly	4-62
Air reservoir	4-60
Air reservoir, description and use of	2-1
Air reservoir draincock	4-59
Axle maintenance	4-31
B	
Basic Issue Items	C-1
Blackout stoplight	4-17
Blackout stoplight lamp and lens	4-16
Body accessory maintenance:	4-93
data plates	4-94
reflectors	4-95
Brakedrum repair	5-3
Brakeshoe repair	5-2
Brakes, operator troubleshooting	3-3
Brakes, organizational troubleshooting	4-12
Brake system maintenance:	4-36
airbrake line replacement	4-68
airbrake system	4-75
air chamber	4-64
air coupling quick disconnects (gladhands)	4-73
air filter assembly	4-62
air reservoir	4-60
air reservoir draincock	4-59
handbrake cable assembly	4-38
handbrake lever assembly	4-37
hydraulic brake line replacement	4-50
hydraulic master cylinder	4-47
hydraulic system bleeding	4-55
hydraulic wheel cylinder	4-48
intervehicular hoses	4-71
relay valve	4-57
service brake	4-41
service brake – adjustment	4-46
Brake system, principles of operation	1-6

INDEX - CONTINUED

Subject Page

C

Cleaning instructions 4-14
Components of End Item and Basic Issue Items lists C-1
Composite light. 4-22
Composite light lamp and lens 4-20

D

Data plates 4-94
Description and use of operator's controls:
air reservoir 2-1
handbrakes 2-2
landing leg 2-4
lunette and safety chain 2-2
step jack 2-3
trailer-to-towing vehicle connections 2-3
Destruction of Army materiel to prevent enemy use 1-1
Direct support and general support maintenance procedures 5-1
brakedrum repair 5-3
brakeshoe repair 5-2
frame repair 5-5
step jack repair 5-5
tire repair 5-5

E

Electrical system maintenance. 4-16
blackout stoplight 4-17
blackout stoplight lamp and lens 4-16
composite light 4-22
composite light lamp and lens 4-20
general 4-16
intervehicular cable 4-23
main harness. 4-25
service taillight 4-19
service taillight lamp and lens 4-18
wiring harness repair 4-27
Electrical system, operator troubleshooting 3-2
Electrical system, organizational troubleshooting 4-11
Equipment characteristics, capabilities, and features 1-2
Equipment data 1-5
Equipment Improvement Recommendations (EIRs), reporting of. 1-2
Expendable supplies and materials list E-1

INDEX - CONTINUED

Subject Page

F

Field manuals A-1
Fording 2-18
Forms A-1
Frame and towing attachment maintenance: 4-82
generator mounting support assembly 4-85
landing leg 4-82
safety chains 4-86
step jack 4-86
lunette 4-84
Frame repair 5-5

H

Handbrake cable assembly 4-38
Handbrake lever assembly 4-37
Handbrake, operator maintenance 3-4
Handbrakes, description and use of 2-2
Hub and brakedrum 4-76
Hydraulic brake line replacement 4-50
Hydraulic master cylinder 4-47
Hydraulic system bleeding 4-55
Hydraulic wheel cylinder. 4-48

I

Illustrated list of manufactured items G-1
Inspection instructions 4-15
Inspection during storage 4-96
Intervehicular cable 4-23
Intervehicular hoses 4-71

L

Landing leg 4-82
Landing leg, description and use of 2-4
Leakage definitions 2-6
Location and description of major components 1-3
Lubrication chart 4-3
Lubrication instructions 4-2
Lunette 4-84
Lunette and safety chain, description and use of 2-2

INDEX - CONTINUED

Subject	Page
M	
Main harness	4-25
Maintenance Allocation Chart (MAC)	B-4
Maintenance forms and records	1-1
Maintenance functions	B-1
Major components, location and description of	1-3
Miscellaneous publications	A-2
O	
Operation	2-13
Operation in extreme cold	2-17
Operation in extreme heat	2-17
Operation in mud	2-17
Operation in saltwater areas	2-17
Operation in sandy or dusty areas	2-17
Operation in snow	2-17
Operation, principles of	1-6
Operation under unusual conditions	2-16
fording	2-18
operation in extreme cold	2-17
operation in extreme heat	2-17
operation in mud	2-17
operation in saltwater areas	2-17
operation in sandy or dusty areas	2-17
operation in snow	2-17
Operation under usual conditions	2-9
after use	2-14
operation	2-13
preparation for use	2-9
Operator/crew Preventive Maintenance Checks and Services (PMCS)	2-6
air reservoir	2-9
brakes	2-8
frame and suspension	2-9
handbrakes	2-8
landing leg and step jack	2-8
lights and reflectors	2-7
lunette, airhoses, intervehicular cable, and safety chains	2-6
service brake system	2-7
suspension and load	2-8
tires	2-6
wheels	2-7
Operator maintenance:	3-3
handbrake	3-4
wheel and tire	3-5
Operator troubleshooting:	3-2
brakes	3-3
electrical system	3-2

INDEX - CONTINUED

Subject | Page

O - CONTINUED

Organizational Preventive Maintenance Checks and Services (PMCS) . . . 4-7
brake assemblies . . . 4-9
brake master cylinder . . . 4-9
frame . . . 4-9
suspension . . . 4-9
wheel bearings . . . 4-9
wheels and tires . . . 4-9
Organizational troubleshooting: . . . 4-10
brakes . . . 4-12
electrical system . . . 4-11

P

Packing, shipment, and storage . . . 4-97
Preliminary servicing of equipment . . . 4-6
Preparation for storage and shipment . . . 4-96
Preparation for use . . . 2-9
Preservation . . . 4-96
Principles of operation . . . 1-6
Publication indexes . . . A-1

R

References . . . A-1
Reflectors . . . 4-95
Relay valve . . . 4-57
Repair Parts and Special Tools List (RPSTL) . . . F-1
Repair parts, special tools; Test, Measurement, and Diagnostic Equipment (TMDE); and support equipment:
direct support . . . 5-1
organizational . . . 4-5
Reporting Equipment Improvement Recommendations (EIRs) . . . 1-2

S

Safety chain, description and use of . . . 2-2
Safety chain . . . 4-86
Scope . . . 1-1
Service brake . . . 4-41
Service brake – adjustment . . . 4-46
Service taillight . . . 4-19
Service taillight lamp and lens . . . 4-18
Service upon receipt . . . 4-5
Servicing and adjustment of equipment, preliminary . . . 4-6
Special tools, TM DE, and support equipment . . . 4-5
Spring . . . 4-88

INDEX - CONTINUED

Subject | Page

S - CONTINUED

Spring maintenance: 4-88
spring 4-88
spring shackle 4-91
Spring shackle 4-91
Step jack 4-86
Step jack, description and use of 2-3
Step jack repair 5-5
Storage and shipment, preparation for 4-96
Storage, inspection during 4-96
Storage, packing, and shipment 4-97

T

Technical bulletins A-2
Technical manuals A-1
Tire repair 5-5
Tools and test equipment requirements B-7
Torque limits H-1
Trailer-to-towing vehicle connectors, description and use of 2-3

W

Wheel and tire 4-81
Wheel and tire, operator maintenance 3-5
Wheel, tire, hub, and drum maintenance 4-76
hub and brakedrum 4-76
wheel and tire 4-81
Wiring harness repair 4-27

By Order of the Secretary of the Army:

JOHN A. WICKHAM, JR.
General, United States Army
Chief of Staff

Official:

ROBERT M. JOYCE
Major General, United States Army
The Adjutant General

Distribution:

To be distributed in accordance with DA Form 12-39, Technical Manuals and Technical Manuals Parts List requirements for Trailers, Generator, 2 1/2 Ton, M200A1.

☆ U.S. GOVERNMENT PRINTING OFFICE:1992-311-831/44432

RECOMMENDED CHANGES TO PUBLICATIONS AND BLANK FORMS For use of this form, see AR 25-30; the proponent agency is ODISC4.	Use Part II *(reverse)* for Repair Parts and Special Tool Lists (RPSTL) and Supply Catalogs/Supply Manuals (SC/SM).	DATE Date you filled out this form.
TO: *(Forward to proponent of publication or form) (Include ZIP Code)* AMSTA-LC-LPIT / TECH PUBS, TACOM-RI 1 Rock Island Arsenal Rock Island, IL 61299-7630	FROM: *(Activity and location) (Include ZIP Code)* Your mailing address	

PART I – ALL PUBLICATIONS (EXCEPT RPSTL AND SC/SM) AND BLANK FORMS

PUBLICATION/FORM NUMBER	DATE	TITLE
TM 9-2330-205-14&P	11 Sep 1984	Chassis, Trailer: Generator, 2 1/2-Ton, 2-Wheel, M200A1

ITEM NO.	PAGE NO.	PARA-GRAPH	LINE NO.*	FIGURE NO.	TABLE NO.	RECOMMENDED CHANGES AND REASON (Provide exact wording of recommended changes, if possible).
	0004 00-2	4-7				Wrong POC is listed.

**Reference to line numbers within the paragraph or subparagraph.*

TYPED NAME, GRADE OR TITLE	TELEPHONE EXCHANGE/AUTOVON, PLUS EXTENSION	SIGNATURE
Your Name		Your Signature

TO: (*Forward direct to addressee listed in publication*)	FROM: (*Activity and location*) (*Include ZIP Code*)	DATE
AMSTA-LC-LPIT / TECH PUBS, TACOM-RI 1 Rock Island Arsenal Rock Island, IL 61299-7630	Your address	Date you filled out this form

PART II – REPAIR PARTS AND SPECIAL TOOL LISTS AND SUPPLY CATALOGS/SUPPLY MANUALS

PUBLICATION NUMBER	DATE	TITLE
TM 9-2330-205-14&P	11 September 1984	Chassis, Trailer: Generator, 2 1/2-Ton, 2-Wheel, M200A1

PAGE NO.	COLM NO.	LINE NO.	NATIONAL STOCK NUMBER	REFERENCE NO.	FIGURE NO.	ITEM NO.	TOTAL NO. OF MAJOR ITEMS SUPPORTED	RECOMMENDED ACTION

PART III – REMARKS (*Any general remarks or recommendations, or suggestions for improvement of publications and blank forms. Additional blank sheets may be used if more space is needed.*)

TYPED NAME, GRADE OR TITLE	TELEPHONE EXCHANGE/AUTOVON, PLUS EXTENSION	SIGNATURE
Your Name		Your Signature

USAPPC V3.00

RECOMMENDED CHANGES TO PUBLICATIONS AND BLANK FORMS For use of this form, see AR 25-30; the proponent agency is ODISC4.	Use Part II *(reverse)* for Repair Parts and Special Tool Lists (RPSTL) and Supply Catalogs/Supply Manuals (SC/SM).	DATE
TO: *(Forward to proponent of publication or form) (Include ZIP Code)* AMSTA-LC-LPIT / TECH PUBS, TACOM-RI 1 Rock Island Arsenal Rock Island, IL 61299-7630	**FROM:** *(Activity and location) (Include ZIP Code)*	

PART I – ALL PUBLICATIONS (EXCEPT RPSTL AND SC/SM) AND BLANK FORMS

PUBLICATION/FORM NUMBER	DATE	TITLE
TM 9-2330-205-14&P	11 September 1984	Chassis, Trailer: Generator, 2 1/2-Ton, 2-Wheel, M200A1

ITEM NO.	PAGE NO.	PARA-GRAPH	LINE NO. *	FIGURE NO.	TABLE NO.	RECOMMENDED CHANGES AND REASON *(Provide exact wording of recommended changes, if possible).*

**Reference to line numbers within the paragraph or subparagraph.*

TYPED NAME, GRADE OR TITLE	TELEPHONE EXCHANGE/AUTOVON, PLUS EXTENSION	SIGNATURE

DA FORM 2028, FEB 74 REPLACES DA FORM 2028, 1 DEC 68, WHICH WILL BE USED. USAPPC V3.00

TO: (*Forward direct to addressee listed in publication*) AMSTA-LC-LPIT / TECH PUBS, TACOM-RI 1 Rock Island Arsenal Rock Island, IL 61299-7630	**FROM:** (*Activity and location) (Include ZIP Code)*	**DATE**

PART II – REPAIR PARTS AND SPECIAL TOOL LISTS AND SUPPLY CATALOGS/SUPPLY MANUALS

PUBLICATION NUMBER	DATE	TITLE
TM 9-2330-205-14&P	11 September 1984	Chassis, Trailer: Generator, 2 1/2-Ton, 2-Wheel, M200A1

PAGE NO.	COLM NO.	LINE NO.	NATIONAL STOCK NUMBER	REFERENCE NO.	FIGURE NO.	ITEM NO.	TOTAL NO. OF MAJOR ITEMS SUPPORTED	RECOMMENDED ACTION

PART III – REMARKS (*Any general remarks or recommendations, or suggestions for improvement of publications and blank forms. Additional blank sheets may be used if more space is needed.)*

TYPED NAME, GRADE OR TITLE	TELEPHONE EXCHANGE/AUTOVON, PLUS EXTENSION	SIGNATURE

USAPPC V3.00

RECOMMENDED CHANGES TO PUBLICATIONS AND BLANK FORMS For use of this form, see AR 25-30; the proponent agency is ODISC4.	Use Part II *(reverse)* for Repair Parts and Special Tool Lists (RPSTL) and Supply Catalogs/Supply Manuals (SC/SM).	DATE
TO: *(Forward to proponent of publication or form) (Include ZIP Code)* AMSTA-LC-LPIT / TECH PUBS, TACOM-RI 1 Rock Island Arsenal Rock Island, IL 61299-7630	**FROM:** *(Activity and location) (Include ZIP Code)*	

PART I – ALL PUBLICATIONS (EXCEPT RPSTL AND SC/SM) AND BLANK FORMS

PUBLICATION/FORM NUMBER	DATE	TITLE
TM 9-2330-205-14&P	11 September 1984	Chassis, Trailer: Generator, 2 1/2-Ton, 2-Wheel, M200A1

ITEM NO.	PAGE NO.	PARA-GRAPH	LINE NO.*	FIGURE NO.	TABLE NO.	RECOMMENDED CHANGES AND REASON *(Provide exact wording of recommended changes, if possible).*

**Reference to line numbers within the paragraph or subparagraph.*

TYPED NAME, GRADE OR TITLE	TELEPHONE EXCHANGE/AUTOVON, PLUS EXTENSION	SIGNATURE

DA FORM 2028, FEB 74 REPLACES DA FORM 2028, 1 DEC 68, WHICH WILL BE USED. USAPPC V3.00

TO: (*Forward direct to addressee listed in publication*) AMSTA-LC-LPIT / TECH PUBS, TACOM-RI 1 Rock Island Arsenal Rock Island, IL 61299-7630	**FROM:** (*Activity and location*) (*Include ZIP Code*)	**DATE**

PART II – REPAIR PARTS AND SPECIAL TOOL LISTS AND SUPPLY CATALOGS/SUPPLY MANUALS

PUBLICATION NUMBER	DATE	TITLE
TM 9-2330-205-14&P	11 September 1984	Chassis, Trailer: Generator, 2 1/2-Ton, 2-Wheel, M200A1

PAGE NO.	COLM NO.	LINE NO.	NATIONAL STOCK NUMBER	REFERENCE NO.	FIGURE NO.	ITEM NO.	TOTAL NO. OF MAJOR ITEMS SUPPORTED	RECOMMENDED ACTION

PART III – REMARKS (*Any general remarks or recommendations, or suggestions for improvement of publications and blank forms. Additional blank sheets may be used if more space is needed.*)

TYPED NAME, GRADE OR TITLE	TELEPHONE EXCHANGE/AUTOVON, PLUS EXTENSION	SIGNATURE

USAPPC V3.00

THE METRIC SYSTEM AND EQUIVALENTS

LINEAR MEASURE

1 Centimeter=10 Millimeters=0.01 Meters=0.3937 Inches
1 Meter=100 Centimeters=1000 Millimeters=39.37 Inches
1 Kilometer=1000 Meters=0.621 Miles

WEIGHTS

1 Gram=0.001 Kilograms=1000 Milligrams=0.035 Ounces
1 Kilogram=1000 Grams=2.2 Lb
1 Metric Ton=1000 Kilograms=1 Megagram=1.1 Short Tons

LIQUID MEASURE

1 Milliliter=0.001 Liters=0.0338 Fluid Ounces
1 Liter=1000 Milliliters=33.82 Fluid Ounces

SQUARE MEASURE

1 Sq Centimeter=100 Sq Millimeters=0.155 Sq Inches
1 Sq Meter=10,000 Sq Centimeters=10.76 Sq Feet
1 Sq Kilometer=1,000,000 Sq Meters=0.0386 Sq Miles

CUBIC MEASURE

1 Cu Centimeter=1000 Cu Millimeters=0.06 Cu Inches
1 Cu Meter=1,000,000 Cu Centimeters=35.31 Cu Feet

TEMPERATURE

5/9 (°F - 32) = °C
212° Fahrenheit is equivalent to 100° Celsius
90° Fahrenheit is equivalent to 32.2° Celsius
32° Fahrenheit is equivalent to 0° Celsius
9/5 C° +32=F°

APPROXIMATE CONVERSION FACTORS

TO CHANGE	TO	MULTIPLY BY
Inches	Centimeters	2.540
Feet	Meters	0.305
Yards	Meters	0.914
Miles	Kilometers	1.609
Square Inches	Square Centimeters	6.451
Square Feet	Square Meters	0.093
Square Yards	Square Meters	0.836
Square Miles	Square Kilometers	2.590
Acres	Square Hectometers	0.405
Cubic Feet	Cubic Meters	0.028
Cubic Yards	Cubic Meters	0.765
Fluid Ounces	Milliliters	29.573
Pints	Liters	0.473
Quarts	Liters	0.946
Gallons	Liters	3.785
Ounces	Grams	28.349
Pounds	Kilograms	0.454
Short Tons	Metric Tons	0.907
Pound-Feet	Newton-Meters	1.356
Pounds per Square Inch	Kilopascals	6.895
Miles per Gallon	Kilometers per Liter	0.425
Miles per Hour	Kilometers per Hour	1.609

TO CHANGE	TO	MULTIPLY BY
Centimeters	Inches	0.394
Meters	Feet	3.280
Meters	Yards	1.094
Kilometers	Miles	0.621
Square Centimeters	Square Inches	0.155
Square Meters	Square Feet	10.764
Square Meters	Square Yards	1.196
Square Kilometers	Square Miles	0.386
Square Hectometers	Acres	2.471
Cubic Meters	Cubic Feet	35.315
Cubic Meters	Cubic Yards	1.308
Milliliters	Fluid Ounces	0.034
Liters	Pints	2.113
Liters	Quarts	1.057
Liters	Gallons	0.264
Grams	Ounces	0.035
Kilograms	Pounds	2.205
Metric Tons	Short Tons	1.102
Newton-Meters	Pound-Feet	0.738
Kilopascals	Pounds per Square Inch	0.145
Kilometers per Liter	Miles per Gallon	2.354
Kilometers per Hour	Miles per Hour	0.621

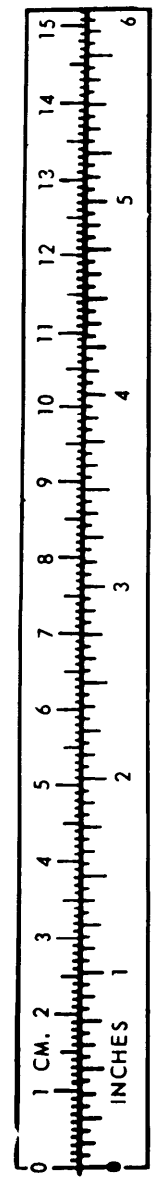

TA089991

(FOR REFERENCE ONLY)

PIN: 056663-000